PLANNING BOARD MEETING AGENDA

April 23, 2025 at 7:30 PM

432 Route 306, Wesley Hills, NY 10952

Phone: 845-354-0400 | Fax: 845-354-4097

CALL TO ORDER

PUBLIC HEARING

1. **PUBLIC HEARING ON THE APPLICATION SUBMITTED BY NANCY RUBIN FOR MORDECHAI SCHWAB FOR ARCHITECTURAL PLAN REVIEW.** Affecting property located on the northerly side of Rockwood Lane. Designated on the Town of Ramapo Tax Map as Parcel ID #32.19-2-4.11. Subject property located at 43 Rockwood Lane.

DISCUSSIONS

2. **DISCUSSION ON THE APPLICATION SUBMITTED BY MARK FRIEDMAN FOR SITE PLAN AND SPECIAL PERMIT.** Affecting property located on the eastern side of Martha Road, 350 feet south of Grandview Avenue. Designated on the Town of Ramapo Tax Map as Parcel ID# 41.14-1-62. Subject property is located at 12A Martha Road.
3. **DISCUSSION ON THE APPLICATION SUBMITTED BY YESHIVA OHR REUVEN FOR REVISED SITE PLAN AND SPECIAL PERMIT.** Affecting property located on the northwesterly side of Grandview Avenue, at the intersection of Spook Rock Road. Known as Tax Parcel ID#'s 40.16-1-17 & 18 on the Ramapo Tax Map. Subject property located at 251-259 Grandview Avenue.
4. **DISCUSSION ON THE APPLICATION SUBMITTED BY RACHEL COHEN FOR A CLEARING/FILLING/EXCAVATING PERMIT.** Affecting property located on the west side of Fieldcrest Drive, 175 feet from the intersection of Suhl Lane. Designated on the Town of Ramapo Tax Map as Parcel ID#41.14-1-17. Subject property is located at 9 Fieldcrest Drive.

APPROVAL OF MINUTES

5. February 26, 2025

ADJOURNMENT

FILE

Item 1.

RECEIVED
VILLAGE OF WESLEY HILLS
MAR 28 2025
BUILDING,
PLANNING & ZONING

43 Rockwood Lane, Suffern, NY 10901

SBL: 32.19 - 2 - 4.11

Attached you will find an application to the Planning Board and Architectural Review Board for the above address.
We are looking to construct a new single family home on this property, which is located within a subdivision.
We are proposing roof shingles by Tamko, Heritage, black in color. The siding will be Stucco, limestone in color. There will be a small portion of wood siding. There will also be a stone veneer. There will be 5" aluminum gutters and downspouts, black in color. The windows will be from Sierra Pacific, black framed. We are proposing natural wood looking garage doors.

FILE

Item 1.

PART I

RECEIVED
VILLAGE OF WESLEY HILLS
MAR 28 2025
BUILDING, PLANNING & ZONING

Name of Municipality VILLAGE OF WESLEY HILLS Date 3/24/25

Please check all that apply:

X Planning Board	Municipal Board
Zoning Board of Appeals* *(Fill out **Part II** of this form.)*	Historical Board
	✓ Architectural Review
Subdivision	Pre-preliminary/Sketch
Number of Lots	Preliminary
Site Plan	Final
Special Permit	Conditional Use
Zoning Code Amendment	Zone Change
Variance	

Applicant: Nancy Rubin **Phone #** 845-424-0244

Address: 16 Squadron Blvd, Suite 104, New City, NY 10956

Street Name & Number (Post Office)

Project Name: 43 Rockwood Lane, Suffern, NY 10901

Tax Map Lot No. 32.19-2-4.11 Map Date

Current Zoning R-50

Location: On the West side of Rockwood, 800 feet West of Cains Rd in the town of Ramapo hamlet/village of Wesley Hills.

Acreage of Parcel **Zoning District** R-50

School District East Ramapo **Postal District** 10901

Fire District Hillcrest **Ambulance District** Ramapo Valley

Water District Veolia **Sewer District** Town of Ramapo

Project Description: *(If additional space required, please attach a narrative summary.)*

We are looking to construct a new single family home, within a subdivision.

If **subdivision**:

1) Is any variance from the subdivision regulations required? No
2) Is any open space being offered? No If so, what amount? _____
3) Is this a standard or average density subdivision? yes

If **site plan**:

1) Total size of building(s) in square feet _____
2) Proposed addition _____
3) Number of dwelling units _____

If **special permit**, list special permit use and what the property will be used for.

_____

_____

Are there **slopes greater than 25%**? If yes, please indicate the amount and show the gross and net area. No

Are there **streams** on the site? If yes, please provide the names. No

Are there **wetlands** on the site? If yes, please provide the names and type. No

Project History: Has this project ever been reviewed before? No

If so, provide a narrative, including the list case number, name, date, and the board you appeared before. _____

_____

List tax map section, block & lot numbers for all other abutting properties in the same ownership as this project.

_____

_____

Property Owner: Mordechai M. Schwab Phone # 718-288-1653

Address 43 Rockwood Lane, Suffern, NY 10901

Street Name & Number (Post Office) State Zip code

Engineer/Architect/Surveyor: Paul Gdanski, P.E. PLLC Phone # 917-418-0999

Address 35b Whittier Ct. Mahwah, NJ 07430

Street Name & Number (Post Office) State Zip code

Attorney: N/A Phone # _____

Address _____

Street Name & Number (Post Office) State Zip code

Contact Person: Nancy Rubin Phone # 845-424-0244

Address 16 Squadron Blvd, Suite 104, New City, NY 10956

Street Name & Number (Post Office) State Zip code

This property is within **500 feet** of:
(Check all that apply)

IF ANY ITEM IS CHECKED, A REVIEW MUST BE DONE BY THE ROCKLAND COUNTY COMMISSIONER OF PLANNING UNDER THE STATE GENERAL MUNICIPAL LAW, SECTIONS 239 K, L, M, AND N.

_____ State or County Road
_____ County/State Land or Right-of-Way
_____ Municipal Boundary
____ State or County Park
____ County Stream
____ County Facility

List name(s) of facility checked above. _____

_____

Location of Parcel(s)_____

_____

Referral Agencies: ***(Please check with the Village Office*** *to make sure that the appropriate agencies, as needed, receive copies of your* ***application and plans*** *for their review.)*

_____ RC Highway Department
_____ RC Drainage Agency
_____ RC Soil and Water Cons. Dist.
_____ NYS Dept. of Transportation
_____ RC Sewer District #1
_____ Rockland County 911
_____ Town of Ramapo Dept. of Public Works
_____ RC Dept. of Planning
_____ RC Dept. of Environmental Health
_____ NYS Dept. of Environmental Conservation
_____ Town of Ramapo Building Dept.

Adjacent Municipality_____

_____

(AS APPLICABLE)

TO ALL APPLICANTS - YOU MUST SEND A COPY OF APPLICATIONS AND PLANS TO:

Regional Manager
Orange and Rockland
75 West Route 59
Spring Valley, NY 10977

I have informed the above checked agencies and Orange and Rockland on _____.

_____
Signature

_____
Date

VILLAGE OF WESLEY HILLS
432 Route 306
Wesley Hills, New York 10952
(845) 354-0400 Fax: (845) 354-4097

AFFIDAVIT OF OWNERSHIP

STATE OF NEW YORK}
COUNTY OF ROCKLAND } SS:
VILLAGE OF WESLEY HILLS }

Mordechai M Schwab being duly sworn, deposes and says that he/she resides at 21 Nytko Drive Pomona NY 10970 in the County of Rockland, State of New York; that he/she is the owner in fee of all that certain lot, piece or parcel of land situated, lying and being in the Village of Wesley Hills, and designated on the Town of Ramapo Map as Section No. 32.19 Lot No. 4.11 and that he/she hereby authorizes the attached application to be submitted in his/her behalf and that the statements of fact contained in said application are true.

The applicant is the (owner) (contract vendee) of the said property.

Owner: [signature]
Address: 21 Nytko Drive
Pomona NY 10970

Sworn to before me this
7 day of March 20 25

[signature]
Notary Public

JOSEPH BRENINGSTALL
NOTARY PUBLIC, STATE OF NEW YORK
Registration No. 02BR0016130
Qualified in Rockland County
Commission Expires 11/11/27

Applicant's Signature and Certification

State of New York)
County of Rockland) SS.:
Town/Village of Wesley Hill)

I, Nancy Rubin, hereby depose and say that all the above statements contained in the papers submitted herewith are true.

Mailing Address
16 Squadron Blvd
Suite 104
New City, NY 10956

SWORN to before this
26th day of March, 2025

Notary Public

YEHUDA ABBOUDI
NOTARY PUBLIC
STATE OF NEW JERSEY
MY COMMISSION EXPIRES JUNE 17, 2025
COMMISSION: #50017921

Owner/Applicant's Consent Form to Visit Property

I, Nancy Rubin, owner/applicant of the property described in application submitted to the town/village board, planning board, zoning board of appeals, and/or supporting staff, do hereby give permission to members of said boards and/or supporting staff to visit the property in question for the purposes incidental to the within application at a reasonable time during the day and upon reasonable notice to the owner or tenant in possession.

Owner/Applicant

SWORN to before this
26th day of March, 2025

Notary Public

TARA S ROBERTS
NOTARY PUBLIC STATE OF NEW YORK
RESIDING IN ROCKLAND COUNTY
NO. 01RO6429066
MY COMMISSION EXPIRES 02/07/2026

Affidavit of Ownership/Owner's Consent

State of New York)
County of Rockland) SS.:
Town/Village of Wesley Hills)

I, Mordecha M Schwab being duly sworn, hereby depose and say that I reside at: 21 Nytko Drive, Pomona NY 10970

in the county of Rockland in the state of New York.

I am the (*) owner in fee simple of premises located at:
43 Rockwood Lane, Suffern, NY 10901

described in a certain deed of said premises recorded in the Rockland County Clerk's Office in Liber _____ of conveyances, page _____ .

Said premises have been in my/its possession since 2024. Said premises are also known and designated on the Town of Ramapo

Tax Map Lot – No. 32.19-2-4.11 Map Date _____

Current Zoning R-50

I hereby authorize the within application on my behalf, and that the statements of fact contained in said application are true, and agree to be bound by the determination of the board. Also, I do hereby give permission to the Village of Wesley Hills, its agents, servants and employees to enter upon the above described property solely for the purposes incidental to the within application at reasonable times upon reasonable notice to the owner or tenant in possession.

Owner
Mailing Address 21 Nytko Drive
Pomona NY 10970

SWORN to before this
7 day of March, 20 25

Notary Public

JOSEPH BRENINGSTALL
NOTARY PUBLIC, STATE OF NEW YORK
Registration No. 02BR0016130
Qualified in Rockland County
Commission Expires 11/11/27

* *If owner is a corporation, fill in the office held by deponent and name of corporation, and provide a list of all directors, officers and stockholders owning more than 5% of any class of stock.*

Affidavit Pursuant to Section 809 of the General Municipal Law

State of New York)
County of Rockland) SS.:
Town/Village of Wesley Hills)

I, Nancy Rubin, being duly ~~sworn~~ affirms, hereby depose and say that all the following statements and the statements contained in the papers submitted herewith are true and that the nature and extent of any interests set forth are disclosed to the extent that they are known to the applicant.

1. Print or type full name and post office address

Nancy Rubin
16 Squadron Blvd, Suite 104
New City, NY 10956

certifies that he is owner or agent of all that certain lot, piece or parcel of land and/or building described in this application **and if not the owner that he has been duly and properly authorized to make this application and to assume responsibility for the owner** in connection with this application for the relief below set forth:

2. To the Architectural / Planning Board of the Town/Village of
(Board, Commission or Agency)
Wesley Hills, Rockland County, New York:

Application, petition or request is hereby submitted for:

( ) Variance or modification from the requirement of Section _____;
( ) Special permit per the requirements of Section _____;
( ) Review and approval of proposed subdivision plat;
( ) Exemption from a plat or official map;
(✓) An order to issue a certificate, permit or license;
( ) An amendment to the Zoning Ordinance or Official Map or change thereof;
( ) Other (*explain*) _____;

To permit construction, maintenance and use of a single family home.

3. Premises affected are in a R-50 zone and from the town of Ramapo tax map, the property is know as:

Tax Map Lot – No. 32.19 - 2 - 4.11

4. There is no state officer, Rockland County Officer or employee or town/village officer or employee nor his or her spouse, brother, sister, parent, child or grandchild, or a spouse of any of these relatives who is the applicant or who has an interest in the person, partnership or association making this application, petition or request, or is an officer, director, partner or employee of the applicant, or that such officer or employee, if this applicant is a corporation, legally or beneficially owns or controls any stock of the applicant in excess of 5% of the total of the corporation if its stock is listed on the New York or American Stock Exchanges; or is a member or partner of the applicant, if the applicant is an association or a partnership; nor that such town/village officer or employee nor any member of his family in any of the foregoing classes is a party to an agreement with the applicant, express or implied, whereby such officer or employee may receive any payment or other benefit, whether or not for service rendered, which is dependent or contingent upon the favorable approval of this application, petition or request.

5. That to the extent that the same is known to your applicant, and to the owner of the subject premises **there is disclosed herewith** the interest of the following officer or employee of the State of New York or the County of Rockland or of the Town/Village of Wesley Hills in the petition, request or application or in the property or subject matter to which it relates:

(if none, so state)

a. Name and address of officer or employee _____

b. Nature of interest _____

c. If stockholder, number of shares _____

d. If officer or partner, nature of office and name of partnership _____

e. If a spouse or brother, sister, parent, child, grandchild or the spouse of any of these blood relatives of such state, county or town/village officer or employee, state name and address of such relative and nature of relationship to officer and employee and nature and extent of office, interest or participation or association having an interest in such ownership or in any business entity sharing in such ownership. _____

f. In the event of corporate ownership: A list of all directors, officers and stockholders of each corporation owning more than five (5%) percent of any class of stock, must be attached, if any of these are officers or employees of the State of New York, or of the County of Rockland, or of the Town/Village of _____.

I, Nancy Rubin, do hereby depose and say that all the above statements and statements contained in the papers submitted herewith are true, knowing that a person who knowingly and intentionally violates this section is guilty of a misdemeanor.

Nancy Rubin

Mailing Address 16 Squadron Blvd, Suite 104 NK
New City, NY 10956

SWORN to before this
26th day of March, 20 25

Tara S Roberts
Notary Public

TARA S ROBERTS
NOTARY PUBLIC STATE OF NEW YORK
RESIDING IN ROCKLAND COUNTY
NO. 01RO6429066
MY COMMISSION EXPIRES 02/07/2026

DISCLAIMER

APPLICANT TAKES FULL RESPONSIBILITY FOR RESEARCHING THE TAX MAP FOR THE LIST OF NAMES OF PROPERTY OWNERS ON THE ENCLOSED ***AFFIDAVIT OF MAILING LIST***, AND SUPPLYING THE NECESSARY AMOUNT OF LABELED STAMPED ENVELOPES.

THE APPLICANT'S ENVELOPES MUST COINCIDE WITH THE LIST. THE CLERK'S RESPONSIBILITY IS LIMITED TO CHECKING NAMES ON THE ENVELOPES AGAINST THE AFOREMENTIONED AFFIDAVIT BEFORE MAILING THEM.

RECEIPT OF THIS DISCLAIMER IS ACKNOWLEDGED

Nancy Rubin
APPLICANT

3/24/25
DATED

AFFIDAVIT

State of New York)
County of Rockland) SS.:
Town/Village of Wesley Hills)

I, Nancy Rubin being ~~duly sworn~~ affirm deposes and says that he is the applicant, agent or attorney for applicant, in the matter of the petition before the Architectural / Planning Board *(board)* in the town/village of Wesley Hills affecting property located at 43 Rockwood Lane, Suffern, NY 10901, Rockland County, New York.

NR

That the following are all of the owners of property ____ **feet** *(distance)* from the premises as to which this application is being taken.

SECTION/BLOCK/LOT	NAME	ADDRESS
See attached.		

SWORN to before this 26th day of March, 20 25

Tara S Roberts
Notary Public

TARA S ROBERTS
NOTARY PUBLIC STATE OF NEW YORK
RESIDING IN ROCKLAND COUNTY
NO. 01RO6429066
MY COMMISSION EXPIRES 02/07/2026

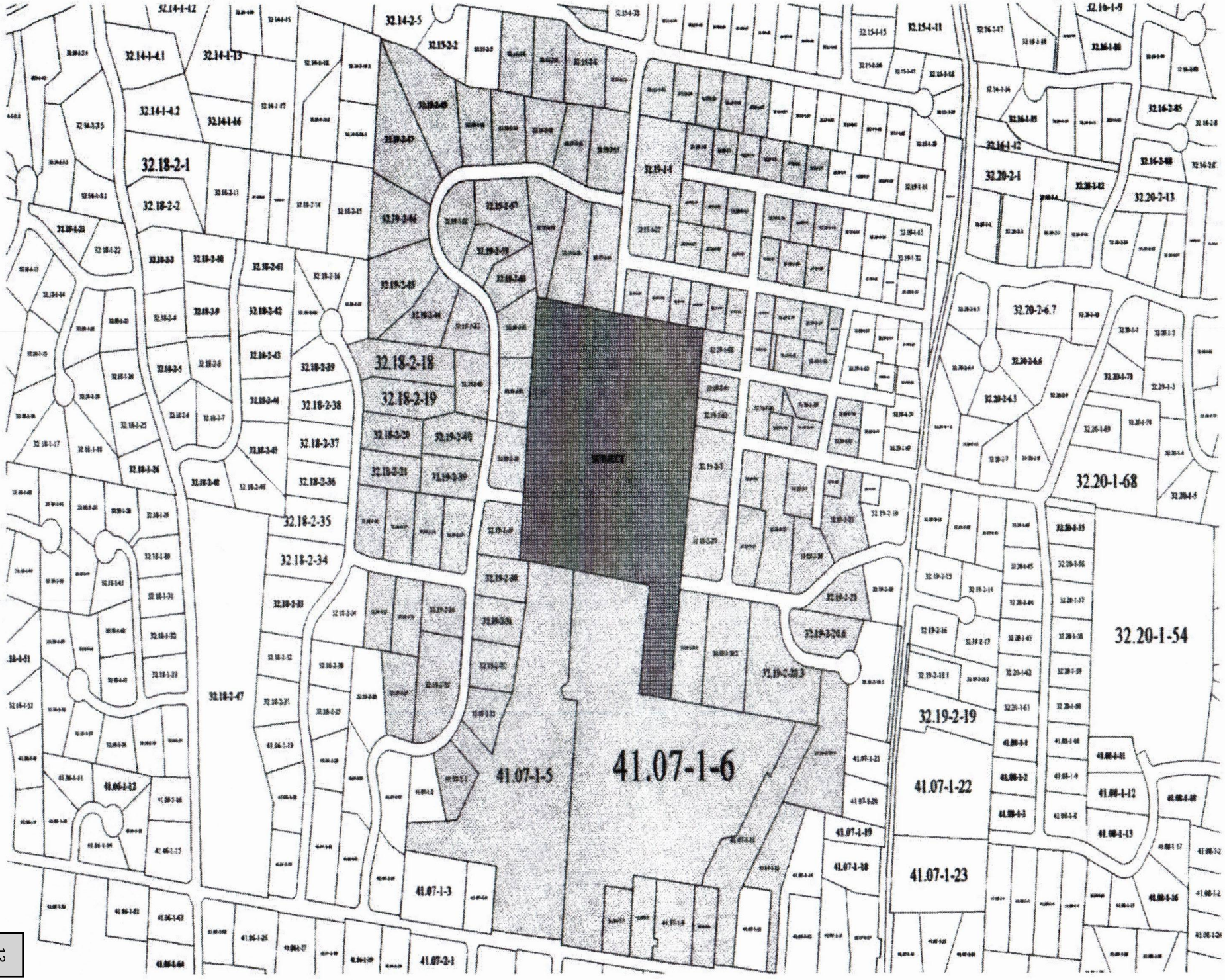
32.14-2-5
32.14-1-4.1
32.14-1-13
32.14-1-4.2
32.14-1-16
32.18-2-1
32.18-2-2
32.18-2-18
32.18-2-19
32.18-2-38
32.18-2-37
32.18-2-36
32.18-2-35
32.18-2-34
32.18-2-47
41.07-1-5
41.07-1-6
41.07-1-3
41.07-2-1
32.19-2-19
41.07-1-22
41.07-1-23
32.20-2-1
32.20-2-13
32.20-2-6.7
32.20-1-68
32.20-1-54

Staples. label size 1" x 2-5/8" compatible with Avery® 5160/8160 04A-U1

11/41.07-1-1
ZIVARI BEHROOZ & SOHAYLA S
7 POWDER HORN DR
SUFFERN, NY 10901

11/32.18-2-19
KERN FAMILY 2020 TRUST
20 ROBLE RD
WESLEY HILLS, NY 10901

11/41.07-1-7
HATZLUCHA BRUCHA 31 LLC
1145 45TH STREET
BROOKLYN, NY 11219

11/41.07-1-10
BERKOWITZ JEROME & MARALYN
25 LIME KILN RD
SUFFERN, NY 10901

11/41.07-1-9
STREICHER NAOMI
PO BOX 343
POMONA, NY 10970

11/41.07-1-8
REZNIK DAVID & HELENE
29 LIME KILN RD
SUFFERN, NY 10901

11/41.07-1-13
STEINER DAVID A & LANA
19 LIME KILN RD
SUFFERN, NY 10901

11/41.07-1-11
WESLEY HILLS SYNAGOGUE
C/O J. CHESIR
23 LIME KILN RD
SUFFERN, NY 10901

11/32.19-2-33
COHEN AARON M & GOLDA R
9 POWDER HORN DR
SUFFERN, NY 10901

11/32.19-2-20.4
ROZENBERG KENNETH & BETH
3 HUNTERS RUN
SUFFERN, NY 10901

11/32.18-2-27
ZAKARIN HERBERT & HANNA
8 POWDER HORN DR
SUFFERN, NY 10901

11/32.19-2-32
ADAMS MITRA & ZIVARI SOHAYLA S
11 POWDER HORN DR
SUFFERN, NY 10901

11/32.19-2-35
BELSKY FRANCES
12 POWDER HORN DR
SUFFERN, NY 10901

11/32.19-2-20.6
KAHAN ELLIOT & ATARA
REVOCABLE LIVING TRUSTS
2 HUNTERS RUN
SUFFERN, NY 10901

11/32.19-2-20.3
HAGLER DARYL
1 HUNTERS RUN
SUFFERN, NY 10901

11/32.19-2-31
KIGLER MARVIN J & IRENE G
17 POWDER HORN DR
SUFFERN, NY 10901

11/32.19-2-20.2
LEMPEL ESTHER
11 ROCKWOOD LN
SUFFERN, NY 10901

11/32.19-2-20.1
GROSS JONATHAN E
15 ROCKWOOD LN
SUFFERN, NY 10901

11/32.19-2-36
BENDRIHEM YOSEF & SHOSHANA
14 POWDER HORN DR
SUFFERN, NY 10901

11/32.18-2-26
BOUSKILA ARIEL & CHAYA
1 MARISA DR
SPRING VALLEY, NY 10977

11/32.18-2-25
LEVIN SETH A & MARLA T
6 ARI DR
SUFFERN, NY 10901

11/41.07-1-6
CNTRL SCHL DSTRICT NO 245-302 OF THE TOWNS OF R
105 SO MADISON AV
SPRING VALLEY, NY 10977

11/32.19-2-21
FETMAN JESSICA & SHERMAN RALPH & SUSAN
26 CORTLAND RD
MONSEY, NY 10952

11/41.07-1-5
WESLEY HILLS VILLAGE OF
432 ROUTE 306
MONSEY, NY 10952

11/32.19-2-30
WAITMAN ROBERT M & PRINCE SHIRA
19 POWDER HORN DR
SUFFERN, NY 10901

11/32.19-2-24
ZOLDAN SHIRA
6 ROCKWOOD LA
SUFFERN, NY 10901

11/32.19-2-26
10 ROCKWOOD HOLDINGS LLC
C/O KELMAN LEVI
18 SKYLARK DRIVE
SPRING VALLEY, NY 10977

11/32.19-2-29
JILLEBA FREDERICK & UGHETTA
21 POWDER HORN DR
SUFFERN, NY 10901

11/32.19-2-27
AWE LEGACY TRUST
12 ROCKWOOD LA
SUFFERN, NY 10901

11/32.19-2-37
CHESIR JOSHUA & FRANCINE
16 POWDER HORN DR
SUFFERN, NY 10901

Staples. label size 1" x 2-5/8" compatible with Avery® 5160/8160 04

Staples. label size 1" x 2-5/8" compatible with Avery® 5160/8160 04A-U1

11/32.19-2-38
RATZKER GARY & ARLENE
3 ARI DR
SUFFERN, NY 10901

11/32.19-2-23
HYMAN SIMCHA & RACHEL
4 ROCKWOOD LANE
SUFFERN, NY 10901

11/32.19-2-25
SCHRIER JEANY
8 ROCKWOOD LN
SUFFERN, NY 10901

11/32.18-2-21
ADLER MARK & JEAN
16 ROBLE RD
SUFFERN, NY 10901

11/32.19-2-28
KUNSTLINGER DANIEL &
WEISSMAN REBECCA
23 POWDER HORN DR
WESLEY HILLS, NY 10901

11/32.18-2-20
FRIEDMAN SANDRA & JACOB
18 ROBLE RD
SUFFERN, NY 10901

11/32.19-1-58
DAVID STEINER
3 SERVEN RD
WESLEY HILLS, NY 10901

11/32.19-1-59
SIEGEL JEFFREY & KIM
4 SERVEN RD
SUFFERN, NY 10901

11/32.19-1-52
ROTH RYAN & RIVKA
8 CHRISTMAS HILL RD
AIRMONT, NY 10952

11/32.19-1-50
HALPERT SHMUEL & AVIVA
2 CAINS RD
SUFFERN, NY 10901

11/32.18-2-23
TYH THE ARI LLC
C/O APFEL STEVEN
5 ARI DR
SUFFERN, NY 10901

11/32.19-2-8
MC NAMARA JOSEPH E &
DOROTHY M
9 POMONA RD
SUFFERN, NY 10901

11/32.19-2-39
OLLECH MARCEL & BARBARA L
18 POWDER HORN DR
SUFFERN, NY 10901

11/32.19-2-5
JUNGREIS DAVID
9 CAINS RD
SUFFERN, NY 10901

11/32.19-1-63
FIRST NATHANEL &
KATZ CHAYA
4 OLD POMONA RD
WESLEY HILLS, NY 10901

11/32.19-1-61
SANDOVAL PABLO & YESVELI
ROXANNA
5 CAINS RD
SUFFERN, NY 10901

11/32.19-1-62
ORLANSKY AVROHOM &
HOFFMAN SHIRA
7 CAINS RD
SUFFERN, NY 10901

11/32.19-1-60
FOGEL MOSHE & CYNTHIA
4 CAINS RD
SUFFERN, NY 10901

11/32.18-2-18
WASSERMAN NEAL I &
ELEANOR N
22 ROBLE RD
SUFFERN, NY 10901

11/32.19-1-49
HALPERT SHMUEL & AVIVA
2 CAINS RD
SUFFERN, NY 10901

11/32.18-2-22
LEVIN-WALDMAN OREN &
RENEE
14 ROBLE RD
SUFFERN, NY 10901

11/32.19-2-7
ARM MAJER
7 POMONA RD
SUFFERN, NY 10901

11/32.19-2-6
WEIL NATHANIEL REV LIVING
TRUST, THE
571 CYPRESS AVE
LOS ANGELES, CA 90065

11/32.19-1-65
LIEBOWITZ ELIAS & SARA
1 SERVEN RD
SUFFERN, NY 10901

11/32.19-2-40
KOTCH BRETT & EVA
REVOCABLE TRUST
20 POWDER HORN DR
SUFFERN, NY 10901

11/32.19-2-62
SCHEINFELD MEIR &
STERN ALISA
536 ROUTE 306
MONSEY, NY 10952

11/32.19-1-64
FRIEDMAN ALEX & NECHAMA S
6 OLD POMONA RD
SUFFERN, NY 10901

11/32.19-2-42
COHEN LEVY SUSAN DIANE
LEGACY TRUST
24 POWDER HORN DR
WESLEY HILLS, NY 10901

11/32.19-1-51
MAKOWSKY PHILIP A
& SARA M
72 EDISON CT
MONSEY, NY 10952

11/32.19-1-48
ROZENBERG KENNETH
3 CAINS RD
SUFFERN, NY 10901

Staples. label size 1" x 2-5/8" compatible with Avery® 5160/8160

Staples.
label size 1" x 2-5/8" compatible with Avery® 5160/8160
04A-U1

11/32.19-1-38
SHMUL OHAD
10 SERVEN RD
SUFFERN, NY 10901

11/32.19-1-39
ABEL MICHAEL B &
LISA S
10 BUENA VISTA RD
SUFFERN, NY 10901

11/32.19-2-4
DAHAN NEIL SHAI &
ALEXANDER HEDVA Y
24 SCENIC DR
SUFFERN, NY 10901

11/32.19-1-40
DARSHAN NAVEENA & PAMELA
12 BUENA VISTA RD
SUFFERN, NY 10901

11/32.19-1-41
MANN ELIEZER M &
BAKER ZEHAVA
14 BUENA VISTA ROAD
SUFFERN, NY 10901

11/32.19-1-42
SHTAYGRUD YEHUDAH &
FUCHS HINDY MIRIAM
1 CAINS RD
SUFFERN, NY 10901

11/32.19-2-61
YANIV DANIEL & RAIZEL
27 POWDER HORN DR
SUFFERN, NY 10901

11/32.19-2-43
26 POWDERHORN DRIVE
REVOCABLE TRUST
26 POWDER HORN LN
SUFFERN, NY 10901

11/32.19-1-43
GOLDBERGER SHARON
18 BUENA VISTA RD
SUFFERN, NY 10901

11/32.19-1-44
ZOLDAN DAVID
65 CARTERET ST
WEST ORANGE, NJ 07052

11/32.19-1-45
KOHN SHOSHANA
22 BUENA VISTA RD
WESLEY HILLS, NY 10901

11/32.19-1-46
GROSS FAIGY
1448 50TH ST
BROOKLYN, NY 11219

11/32.19-1-47
WEG LEGACY TRUST
26 BUENA VISTA RD
SUFFERN, NY 10901

11/32.19-2-44
HOLZBERG BASYA & RONALD
PO BOX 500
MONTVALE, NJ 07645

11/32.19-1-28
SHUCHT DAVID & BEN-DOV
ESTER
11 BUENA VISTA RD
SUFFERN, NY 10901

11/32.19-2-60
SPITZ ABRAHAM
& RACHEL
29 POWDER HORN DR
WESLEY HILLS, NY 10901

11/32.19-1-27
KAHAN MORDECHAI &
KAHANA CHAYA
13 BUENA VISTA ROAD
WESLEY HILLS, NY 10901

11/32.19-2-45
POWDER HORN DEVELOPMENT
LLC
SUITE 339
46 MAIN ST
MONSEY, NY 10952

11/32.19-1-26
KAHANA PINCHAS & HALPERT
CHANA
15 BUENA VISTA RD
SUFFERN, NY 10901

11/32.19-1-25
KLEIN JACK W & PAULINE
17 BUENA VISTA RD
SUFFERN, NY 10901

11/32.19-1-24
SOSOVER MOSHE
6654 SELFRIDGE ST
FOREST HILLS, NY 11375

11/32.19-2-59
BEACON SEVEN INC
C/O ROSENBERG SUSAN
130 ROUTE 59
SPRING VALLEY, NY 10977

11/32.19-1-23
JACOBSON BARBARA & JONAH
21 BUENA VISTA RD
SUFFERN, NY 10901

11/32.19-1-16
GROLL JANICE G
8 ONDERDONK RD
SUFFERN, NY 10901

11/32.19-2-54
REICHMANN MARC & TOVAH
MIRYAM TZIPPORAH
47 POWDER HORN LN
SUFFERN, NY 10901

11/32.19-1-17
MATOS CADMO B & FLOR M
10 ONDERDONK RD
SUFFERN, NY 10901

11/32.19-1-22
WEISSBERG BELINDA
23 BUENA VISTA RD
SUFFERN, NY 10901

11/32.19-1-18
OSEN JANET
12 ONDERDONK RD
SUFFERN, NY 10901

11/32.19-2-55
FLORANS MOSHE &
TSINMAN FEIGA
45 POWDER HORN DR
SUFFERN, NY 10901

11/32.19-1-19
HEFFLER MARK & MARY
14 ONDERDONK RD
SUFFERN, NY 10901

Staples.
label size 1" x 2-5/8" compatible with Avery® 5160/8160

Staples.
label size 1" x 2-5/8" compatible with Avery® 5160/8160
04A-U1

11/32.19-1-20
KERZNER JOSEPH A
& LICHTER RACHEL M
16 ONDERDONK RD
WESLEY HILLS, NY 10901

11/32.19-2-58
CAREN MARK S & VANESSA B
33 POWDER HORN DR
SUFFERN, NY 10901

11/32.19-1-21
GUZELGUL MICHAEL &
TROPPER NECHOMA GILA
53 EDISON COURT
MONSEY, NY 10952

11/32.19-2-57
41 POWDERHORN LLC
41 POWDERHORN LLC
SUFFERN, NY 10901

11/32.19-2-56
HURWITZ CHAYA BRACHA
43 POWDERHORN DR
WESLEY HILLS, NY 10977

11/32.19-2-46
POWDER HORN DEVELOPMENT
LLC
SUITE 339
46 MAIN ST
MONSEY, NY 10952

11/32.19-1-7
NENNER MARK & SIMONE
9 ONDERDONK RD
SUFFERN, NY 10901

11/32.19-1-6
HOFFMAN MORDECHAI S
11 ONDERDONK RD
SUFFERN, NY 10901

11/32.19-1-5
TANG KATHY &
ACOSTA HARRY
15 ONDERDONK RD
SUFFERN, NY 10901

11/32.19-1-4
BLISKO YAAKOV &
SPITZ ESTHER
17 ONDERDONK RD
SUFFERN, NY 10901

11/32.19-1-3
KAUFMAN ELIYAHU & BINA
19 ONDERDONK RD
SUFFERN, NY 10901

11/32.19-1-2
ONDERDONK 21 LLC
C/O LAUFER ISSAC
120 STRAWBERRY LANE
NEWBURGH, NY 12550

11/32.19-1-1
25 ONDERDONK LLC
527 MARCY AVE
BROOKLYN, NY 11206

11/32.19-2-53
RATNER JOSHUA S & AMY R &
RATNER ROBERT & CAMILLE
48 POWDER HORN DR
SUFFERN, NY 10901

11/32.19-2-52
LIPOFF LAWRENCE & LAUREN
46 POWDER HORN LN
SUFFERN, NY 10901

11/32.19-2-51
SHAPIRO HADASSAH
44 POWDER HORN DR
SUFFERN, NY 10901

11/32.19-2-50
SCHOCHET CHAIM & SARAH
42 POWDER HORN DR
WESLEY HILL, NY 10901

11/32.19-2-49
HEINEMANN SAMUEL &
CHASIDA
40 POWDER HORN LN
SUFFERN, NY 10901

09/32.15-1-27
SPITZ JOEL M & MIRIAM
18 SCENIC DRIVE
SUFFERN, NY 10901

09/32.15-1-28
ERBLICH YOSEF & ESTHER
KAGAN
20 SCENIC DR
SUFFERN, NY 10901

09/32.15-1-29
TAPPER NISSON &
RUBINSTEIN GOLDIE
40 POWDER HORN DR
SUFFERN, NY 10901

09/32.15-1-30
DAHAN NEIL S &
ALEXANDER-DAHAN HEDVA
24 SCENIC DR
SUFFERN, NY 10901

09/32.15-1-31
SILVERBERG YEHOSHUA &
DEBRA
26 SCENIC DR
SUFFERN, NY 10901

09/32.15-1-32
SHEINKOPF ADINA & GOLOMB
MICHAEL
27 HIDDEN VALLEY DR
SUFFERN, NY 10901

11/32.19-2-47
POWDER HORN DEVELOPMENT
LLC
46 MAIN STREET #339
MONSEY, NY 10952

11/32.19-2-48
WEINBERGER STUART &
HADASSAH
38 POWDER HORN LN
SUFFERN, NY 10901

89/32.15-2-6
MERMELSTEIN JOSHUA &
BETH S
28 SCENIC DR
SUFFERN, NY 10901

89/32.15-2-5
SCENIC DRIVE QUALIFIED
PERSONAL ESIDENCE TRUST
30 SCENIC DR
SUFFERN, NY 10901

89/32.15-2-4
ROUTE 304 DEVELOPMENT INC
C/O MILTON SHAPIRO
75 N MIDDLETOWN RD
NANUET, NY 10954

Staples.
label size 1" x 2-5/8" compatible with Avery® 5160/8160

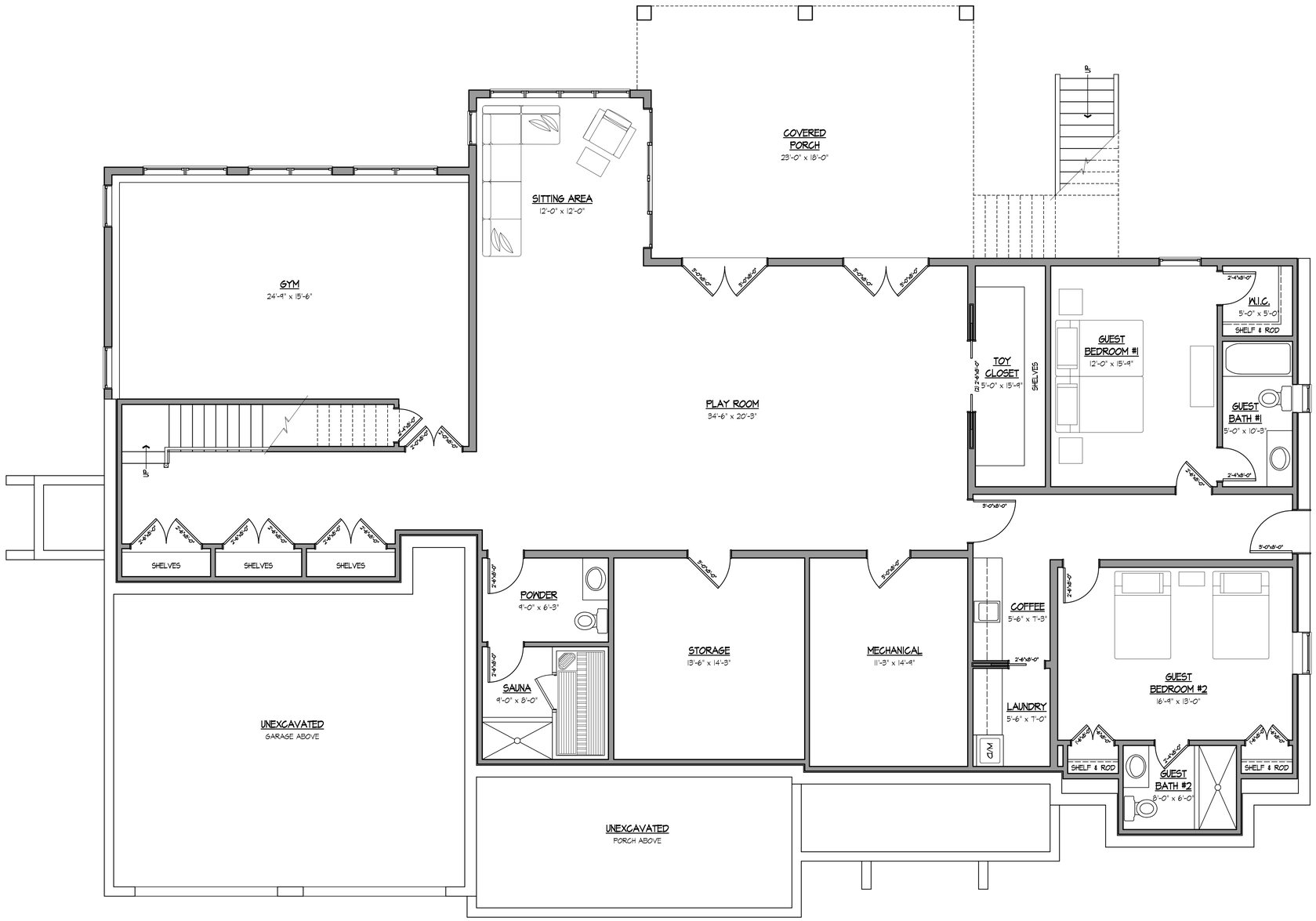

PROPOSED BASEMENT AND GARAGE PLAN

SCALE: 1/4"=1'-0"

FLOOR AREA = 3,287 SF

SCHWAB RESIDENCE

LOT 11 ROCKWOOD LANE, WESLEY HILLS, NY

PROPOSED FLOOR PLANS

PROJECT

SHEET TITLE

PROJECT NUMBER	DATE	SCALE	DRAWN BY
2312-00	3/4/25	AS NOTED	TR

REVISIONS △

NO.	DATE	DESCRIPTION

ROSENBLUM ARCHITECTURE
221 QUAKER ROAD
POMONA, NEW YORK 10970
(845) 364-0337
info@adaparch.com

This document and the ideas and designs incorporated herein, as an instrument of professional service, are the property of Rosenblum Architecture and shall not be used for any purpose other than the specified project or reprinted without written authorization from Todd Rosenblum © 2023

SHEET NUMBER

A1

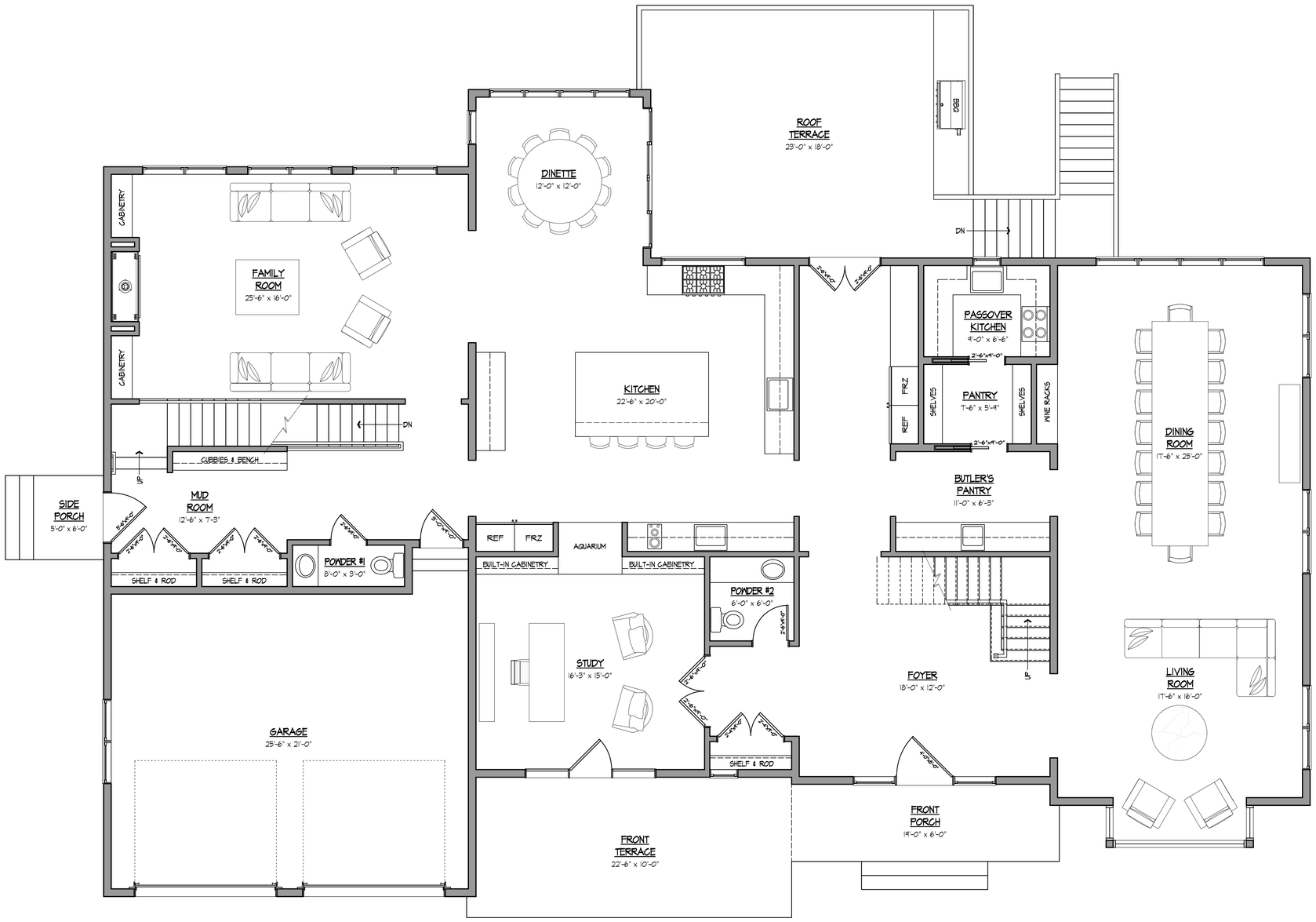

PROPOSED FIRST FLOOR PLAN

SCALE: 1/4"=1'-0"

FLOOR AREA = 3,233 SF

REGISTERED ARCHITECT
GUIDO C. ROSENBLUM
STATE OF NEW YORK
023143

SCHWAB RESIDENCE

LOT 11 ROCKWOOD LANE, WESLEY HILLS, NY

PROPOSED FLOOR PLANS

PROJECT

SHEET TITLE

PROJECT NUMBER	DATE	SCALE	DRAWN BY
2312-00	3/4/25	AS NOTED	TR

REVISIONS △

NO.	DATE	DESCRIPTION

ROSENBLUM ARCHITECTURE
221 QUAKER ROAD
POMONA, NEW YORK 10970
(845) 364-0337
info@adaparch.com

This document and the ideas and designs incorporated herein, as an instrument of professional service, is the property of Guido Rosenblum Architecture and shall not be used for any purpose other than the specified project or reproduced without written authorization from Guido Rosenblum © 2023.

SHEET NUMBER

A2

PROPOSED SECOND FLOOR PLAN

SCALE: ¼"=1'-0"

FLOOR AREA = 2,880 SF

SCHWAB RESIDENCE

LOT 11 ROCKWOOD LANE, WESLEY HILLS, NY

PROPOSED FLOOR PLANS

PROJECT

SHEET TITLE

PROJECT NUMBER	DATE	SCALE	DRAWN BY
2312-00	3/4/25	AS NOTED	TR

REVISIONS △

NO.	DATE	DESCRIPTION

ROSENBLUM ARCHITECTURE
221 QUAKER ROAD
POMONA, NEW YORK 10970
(845) 364-0337
info@adaparch.com

This document and the ideas and designs incorporated herein, as an instrument of professional service, are the property of Todd Rosenblum R.A. and shall not be used for any purpose other than those specifically agreed to by the parties, nor shall any other use of this project or reproduce without written authorization from Todd Rosenblum © 2023.

SHEET NUMBER

A3

FRONT ELEVATION

SCALE: ¼"=1'-0"

REGISTERED ARCHITECT TODD ROSENBLUM 023342 STATE OF NEW YORK

SCHWAB RESIDENCE

LOT 11 ROCKWOOD LANE, WESLEY HILLS, NY

SHEET TITLE: EXTERIOR ELEVATIONS

PROJECT

PROJECT NUMBER	2312-00
DATE	3/4/25
SCALE	AS NOTED
DRAWN BY	TR

REVISIONS △

NO.	DATE	DESCRIPTION

ROSENBLUM ARCHITECTURE
221 QUAKER ROAD
POMONA, NEW YORK 10970
(845) 364-0337
info@adaparch.com

This document and the ideas and designs incorporated herein, as an instrument of professional service, are the property of Todd Rosenblum Architecture and shall not be used for any purpose not specifically agreed to in writing by the project of reprinted without written authorization from Todd Rosenblum © 2025

SHEET NUMBER

A4

REAR ELEVATION

SCALE: ¼"=1'-0"

SCHWAB RESIDENCE

LOT 11 ROCKWOOD LANE, WESLEY HILLS, NY

EXTERIOR ELEVATIONS

PROJECT

SHEET TITLE

PROJECT NUMBER	DATE	SCALE	DRAWN BY
2312-00	3/4/25	AS NOTED	TR

REVISIONS △

NO.	DATE	DESCRIPTION

ROSENBLUM ARCHITECTURE
221 QUAKER ROAD
POMONA, NEW YORK 10970
(845) 364-0337
info@adaparch.com

This document and the ideas and designs incorporated herein, as an instrument of professional service, are the property of Todd Rosenblum Architecture and shall not be used for any purpose other than the specified project or reproduced without written authorization from Todd Rosenblum © 2023.

SHEET NUMBER

A5

RIGHT SIDE ELEVATION

SCALE: ¼"=1'-0"

REGISTERED ARCHITECT
TODD C. ROSENBLUM
STATE OF NEW YORK
022122

PROJECT

SCHWAB RESIDENCE

LOT 11 ROCKWOOD LANE, WESLEY HILLS, NY

SHEET TITLE

EXTERIOR ELEVATIONS

PROJECT NUMBER	2312-00
DATE	3/4/25
SCALE	AS NOTED
DRAWN BY	TR

REVISIONS △

NO.	DATE	DESCRIPTION

ROSENBLUM
ARCHITECTURE
221 QUAKER ROAD
POMONA, NEW YORK 10970
(845) 364-0337
info@adaparch.com

This document and the ideas and designs incorporated herein, as an instrument of professional service, are the property of ROSENBLUM ARCHITECTURE and shall not be used for any purpose not specifically agreed to in writing by the owner, other than the owner's project or reprinted without written authorization from Todd Rosenblum © 2025

SHEET NUMBER

A6

LEFT SIDE ELEVATION
SCALE: ¼"=1'-0"

REGISTERED ARCHITECT
ODED C. ROSENBLUM
023312
STATE OF NEW YORK

SCHWAB RESIDENCE

LOT 11 ROCKWOOD LANE, WESLEY HILLS, NY

SHEET TITLE
EXTERIOR ELEVATIONS

PROJECT

PROJECT NUMBER	2312-00
DATE	3/4/25
SCALE	AS NOTED
DRAWN BY	TR

REVISIONS △

NO.	DATE	DESCRIPTION

ROSENBLUM
ARCHITECTURE
221 QUAKER ROAD
POMONA, NEW YORK 10970
(845) 364-0337
info@adaparch.com

This document and the ideas and designs incorporated herein, as an instrument of professional service, are the property of Oded Rosenblum Architecture and shall not be used for any purpose other than those specified in connection with the project or reproduced without written authorization from Oded Rosenblum © 2023.

SHEET NUMBER
A7

EMANUEL LAW P.C.

Ira M. Emanuel, Esq. | Amy Mele, Esq. *Of Counsel*
Counsel to Freeman & Loftus, RLLP

Four Laurel Road
New City, NY 10956

Info@EmanuelLaw.com

www.EmanuelLaw.com

Tel: 845-634-4141

PLANNING BOARD
VILLAGE OF WESLEY HILLS

NARRATIVE SUMMARY

12A MARTHA ROAD
Tax Lot 41.14-1-62

Mark and Devorah Friedman are building their new home at 12A Martha Road. In 2020, they applied for and received variances, largely due to the unusual shape and configuration of the lot. As the design progressed, the Friedmans realized that additional work was needed. The revised plan adds a tennis court, relocates the swimming pool, replaces a gazebo with a pool cabana, and reconfigures the driveway and parking pad. The size of the proposed tennis court triggers the need for a special permit from this Board under § 230-140(4)(b). Special permits also require approved site plans.

The site is on the east side of Martha Road, approximately 350 feet from Grandview Avenue in an R-50 zone. The existing home was demolished. In its place the Friedmans are building a new single-family home with decks, patios, a swimming pool and a pool cabana. To accomplish this, this Board granted the following variances:

Dimension	Required	Approved
Rear yard (swimming pool and poolhouse)	50ft	33ft
Impervious surface ratio	0.20	0.26
Front yard impervious surface ratio	0.15	0.169

A copy of the variance resolution dated September 16, 2020, is annexed as Exhibit 1.

Since that time, the plans have progressed and changed. The original driveway included a circular turnaround and small parking pad. The new driveway reduces the radius of the turnaround and enlarges the parking pad.

The Friedmans want to slightly relocate the swimming pool and replace a gazebo with a pool cabana. Their home and pool are clustered at the north end of their lot, leaving the entire southern half open.

The southern half of the site is relatively flat, having the perfect topography for the court. The tennis court is to be located in the southeastern corner of the lot.[1] A gravel walkway will lead to an open pergola adjacent to the tennis court.

The swimming pool will be moved inward. The pool cabana will also be more inward than was the gazebo. However, the pool patio will be wider than originally proposed.

The changes are shown on an overlay drawing, submitted herewith as Sheet 4 of 5. The front lot line is the westerly lot line, parallel to Martha Road. The rear lot line is the easterly line; the side lot lines are the northerly and southerly lot lines. (North on the drawing is toward the right.) The changes trigger the need for additional variances:

Dimension	Required[2]	Proposed
Side yard (pool cabana)[3]	30 ft	25 ft
Rear yard (house – SE corner)	33 ft[4]	31.9 ft
Impervious surface ratio	0.26	0.36
Front yard impervious surface ratio	0.169	0.23
Accessory structures[5]	2	4

The Friedmans will apply for these new variances at the appropriate time.

Special Permit Standards

A special permit is required for an accessory use having an area greater than 2500sf. The proposed tennis court is considered an accessory use (sports court) and is larger than the threshold.

A special permit, or special use permit, is defined as,

> an authorization of a particular land use which is permitted in a zoning ordinance or local law, subject to requirements imposed by such zoning ordinance or local law to assure that the proposed use is in harmony with such zoning ordinance or local law and will not adversely affect the neighborhood if such requirements are met.[6]

Uses that are allowed under a special permit

---

[1] Tennis courts may be located 15 feet from a side or rear lot line. Zoning Code § 230-14.O.(4)(a).
[2] Required dimensions for impervious surface ratio and front yard impervious surface ratio reflect the variances previously granted.
[3] The pool cabana is greater than 100 sf in size and therefore does not qualify for a shallower required yard.
[4] Per variance granted Sept. 16, 2020.
[5] Swimming pool, pool cabana, tennis court, pergola. Zoning Code, § 230-14.O.(6). In addition, § 230-14.O(4)(b) requires a special permit from the Planning Board for accessory structures larger than 2,500sf. The tennis court will require such a special permit.
[6] Town L. § 274-b.1.

> have been determined to be compatible with the allowed uses in the district, but to ensure that the character of the community and other public health, safety and welfare concerns are protected, permits relating to those uses are not automatic, but are rather subject to review by a designated municipal board [citations omitted].[7]

Unlike a use variance, a special permit use is "tantamount to a legislative finding that the permitted use is in harmony with the zoning and will not adversely affect the neighborhood."[8] As such, "it must be granted where the articulated conditions have been met unless there exists a reasonable ground for denial supported by substantial evidence."[9]

The need for area variances does not constitute non-compliance with the "articulated conditions":

> Notwithstanding any provision of law to the contrary, where a proposed special use permit contains one or more features which do not comply with the zoning regulations, application may be made to the zoning board of appeals for an area variance pursuant to section two hundred sixty-seven-b of this article, without the necessity of a decision or determination of an administrative official charged with the enforcement of the zoning regulations.[10]

Special permits run with the land, and are not limited to the individual applicant or property owner.[11]

There are no special conditions that apply, so the proposed use only needs to meet the general standards of § 230-22:

A. The location and size of the special permit use, the nature and intensity of the operations involved in it or conducted in connection with it, the size of the site in relation to it and the location of the site with respect to streets giving access to it are such that it will be in harmony with the appropriate and orderly development of the area in which it is located.

New York courts have discussed this type of condition:

> As a starting point, it is well settled that the inclusion of a permitted use in a [*13] zoning law "is tantamount to a legislative finding that the permitted use is in harmony with the general zoning plan and will not adversely affect the local community" (*Matter of WEOK Broadcasting Corp. v Planning Bd. of Town of Lloyd*, 79 NY2d 373, 383 [1992]; *see RPM Motors v Gulotta*, 88 AD2d 658, 658 [1982]). The same is true of a permitted use that is subject to a special use permit (*see Matter of Retail Prop. Trust v Board of Zoning Appeals of Town of Hempstead*, 98 NY2d 190, 195 [2002], *Matter of Blanchfield v Town of Hoosick,* 149 AD3d 1380,

---

[7] 2 Salkin, *New York Zoning Law and Practice* (4th ed.), § 30:1.
[8] *Id.* at § 30:2.
[9] *Id.*
[10] Town L. § 274-b.3.
[11] *St. Onge v. Donovan,* 71 N.Y.2d 507, 527 N.Y.S.2d 721 (1988).

> 1383 [2017]. Indeed, in terms of the project's harmony with the general zoning plan, a use subject to a special use permit is a permitted use, except that the applicant must "demonstrate compliance with the conditions legislatively imposed upon the permitted use" (*Matter of Troy Sand & Gravel Co., Inc. v Fleming*, 156 AD3d 1295, 1299 12017] [internal quotation marks and citation omitted; emphasis added], lv denied 31 NY3d 913 [2018]). Thus, although the project requires a special use permit, [fn omitted] the proposed use is still one that is permitted and this, indeed, is "tantamount" to a finding of compatibility with Local Law No. 4 (*see Matter of Blanchfield v Town of Hoosick*, 149 AD3d at 1383).[12]

The subject neighborhood is seeing the construction or reconstruction of larger homes with more amenities.

15 Judith Lane, one lot south of the subject and across Judith Lane (approx.. 280 feet away), has a tennis court close to its rear lot line. The court enclosure measures over 6,800 sf.[13]

219 Willow Tree Road (approx.. 900 feet away) has a 5,300 sf tennis court enclosure.

95 Forshay Road (approx.. 1490 feet away) has a 7,400 sf tennis court enclosure.

A map showing the relative proximity of these properties is attached as Exhibit 2.

The playing surface of a standard tennis court is 2,808 sf. With sidelines and enclosure, 7,200sf is needed.[14] Thus, any tennis court will require a special permit.

B. The location, nature and height of buildings, walls and fences and the nature and extent of existing or proposed plantings on the site are such that the special permit use will not hinder or discourage the appropriate development and use of adjacent land and buildings.

The proposed tennis court is located in a corner of the subject property, within bounds and away from the remainder of the developed area of the property. Yard variances are not needed for the tennis court.

C. Operations in connection with any special permit use will not be more objectionable to nearby properties by reason of noise, traffic, fumes, vibration or other characteristics than would be the operations of permitted uses not requiring a special permit.

---

[12] *Matter of Hart v. Town of Guilderland*, 2021 N.Y. App. Div. LEXIS 4367, *12; 2021 NY Slip Op 04273

[13] Measurements in this section are based on the aerial photographs in the Rockland County Geographic Information System.

[14] https://www.harrodsport.com/advice-and-guides/tennis-court-dimensions

Tennis courts are similar to other sports courts with bouncing balls, such as half-court basketball courts (900sf)[15] or pickleball courts (1600sf)[16]. Neither require a special permit as they are smaller than 2500sf.

D. Parking and loading areas will be of adequate size for the particular special permit use, properly located and suitably screened from adjoining residential uses, and the entrance and exit drives shall be laid out so as to achieve maximum convenience and safety.

No additional parking or loading areas are required.

E. The special permit use will not result in diminution of the value of property in the neighborhood or a change in the character of the neighborhood in which the use would be situated.

The proposed tennis court is in keeping with amenities associated with larger, more expensive homes now being built.

SEQRA and GML status

This is an Unlisted action under SEQRA. A short EAF is submitted herewith.

The property is within 500 feet of Grandview Avenue (County Route 80), the Town of Ramapo, and the Village of Montebello. As such, referral to the Rockland County Planning Department is required under General Municipal Law § 239-m and -nn.

Dated: March 18, 2025
New City, New York

EMANUEL LAW, PC

By: _____
Ira M. Emanuel

[15] https://modutile.com/basketball-half-court-dimensions/#:~:text=Basketball%20Three%2DPoint%20Line%20Distance,the%20outside%20of%20the%20lines.
[16] https://www.ppatour.com/building-a-pickleball-court/#:~:text=COURT%20DIMENSIONS:,%2C%20doubles%2C%20and%20mixed%20doubles.

In the Matter of the Application of
Mark Friedman
Premises situated on the east side of Martha
Road approximately 350 feet from Grandview
Avenue, known as 12A Martha Road, designated
on the Tax Map as Section 41.14 Block 1 Lot 62,
in an R-50 Zoning District

WHEREAS, application has been made to the Zoning Board of Appeals of the Village of Wesley Hills by Mark Friedman for variances from the provisions of Section 230-17 Attachment I of the Code of the Village of Wesley Hills, to permit the construction, maintenance and use of a single family residence, inground swimming pool and poolhouse having a rear yard of 33 feet instead of the minimum required of 50 feet, impervious surface ratio of .26 instead of the maximum permitted of .20 and front yard impervious surface ratio of .169 instead of the maximum permitted of .15, and

WHEREAS, after due notice, a public hearing on said application was held by the Zoning Board of Appeals on August 19, 2020, which hearing was continued on September 16, 2020, and

WHEREAS, the applicant appeared in person, by his attorney, his engineer and his contractor, who testified as follows:

That this is a flag lot and the house is set far back on the property, which is the reason for the rear yard variance;

That the house to be constructed has a larger rear yard than the one that has been demolished;

That in addition to the flag, there is also an existing circular driveway that will remain, thus requiring the need for an impervious surface variance and a front yard impervious surface variance;

That the property in the rear is privately owned and is a large vacant lot; the rear yard variance does not impact the neighbor; and

WHEREAS, members of the Zoning Board of Appeals visited the site to view the proposed construction; and

WHEREAS, one neighbor appeared in support of the application and no one appeared in opposition to the application;

NOW, THEREFORE, IT IS HEREBY DETERMINED that the proposed action is a Type II action and that no SEQRA determination is required, and be it further

RESOLVED, that the application submitted by Mark Friedman for variances from the

provisions of Section 230-17 Attachment I of the Code of the Village of Wesley Hills, to permit the construction, maintenance and use of a single family residence, pool and poolhouse having a rear yard of 33 feet instead of the minimum required of 50 feet, impervious surface of .26 instead of the maximum permitted of .20 and front yard impervious surface of .169 instead of the maximum permitted of .15 is hereby approved, subject to the following conditions:

1. Rockland County Highway Department letter dated September 11, 2020;

2. Rockland County Center for Environmental Health letter dated September 11, 2020;

3. Rockland County Sewer District No. 1 letter dated September 11. 2020; and be it further

RESOLVED, that the Zoning Board of Appeals hereby makes the following Findings of Fact:

1. That there is no feasible alternative to granting the variances, which are required because of the existing flag lot and circular driveway, limiting the amount of land available for construction of the house, pool and poolhouse;

2. That the house, pool and poolhouse will not be visible from the street or from adjoining properties except for one, so will have no effect on adjoining properties or other properties in the neighborhood;

3. That the house, pool and poolhouse are similar to other improvements in the neighborhood and will not change the character of the neighborhood;

4. That the benefit to the applicant by granting the variances is substantial, whereas no detriment to adjoining properties or to the community has been identified.

Re: 12A Martha Rd

Nearby tennis court locations

PART I

Name of Municipality **VILLAGE OF WESLEY HILLS** Date March 17, 2025

Please check all that apply:

X Planning Board	Municipal Board
Zoning Board of Appeals*	Historical Board
(Fill out **Part II** *of this form.)*	Architectural Review
Subdivision	Pre-preliminary/Sketch
Number of Lots	Preliminary
x Site Plan	x Final
x Special Permit	Conditional Use
Zoning Code Amendment	Zone Change
Variance	

Applicant: Mark Friedman **Phone #**

Address: 12A Martha Road, Wesley Hills

Street Name & Number (Post Office)

Project Name: 12A Martha Road

Tax Map Lot No. 41.14-1-62 Map Date 2/2024

Current Zoning R-50

Location: On the East side of Martha Drive, approx 350 feet South of Grandview Avenue in the town of Ramapo hamlet/village of Wesley Hills.

Acreage of Parcel 1.8 acres **Zoning District** R-50

School District Suffern CSD **Postal District** Monsey

Fire District Moleston **Ambulance District** Ramapo Valley

Water District Veolia **Sewer District** Benefit Area No. 5

Project Description: *(If additional space required, please attach a narrative summary.)*

See attached narrative

If **subdivision**:

1) Is any variance from the subdivision regulations required?_____
2) Is any open space being offered? ____ If so, what amount? _____
3) Is this a standard or average density subdivision?_____

If **site plan**:

1) Total size of building(s) in square feet _____
2) Proposed addition _____
3) Number of dwelling units _____

If **special permit**, list special permit use and what the property will be used for.

Tennis Court accessory to single family dwelling (more than 2500sf)

Are there **slopes greater than 25**%? If yes, please indicate the amount and show the gross and net area. No

Are there **streams** on the site? If yes, please provide the names. No

Are there **wetlands** on the site? If yes, please provide the names and type. No

Project History: Has this project ever been reviewed before? Yes

If so, provide a narrative, including the list case number, name, date, and the board you appeared before. ZBA approval - 9/16/2020

List tax map section, block & lot numbers for all other abutting properties in the same ownership as this project.

none

Property Owner: Mark and Devorah Friedman Phone #_____

Address 12A Martha Road Wesley Hills, NY 10952

Street Name & Number (Post Office) State Zip code

Engineer/Architect/Surveyor: Civil Tech Phone # 845-547-2241

Address 139 Lafayette Avenue, 2nd Floor, Suffern, NY 10901

Street Name & Number (Post Office) State Zip code

Attorney: Emanuel Law, PC - Ira Emanuel, Esq Phone # 845-634-4141

Address 4 Laurel Road, New City, NY 10956

Street Name & Number (Post Office) State Zip code

Contact Person: Ira Emanuel Phone # 845-634-4141

Address 4 Laurel Road, New City, NY 10956

Street Name & Number (Post Office) State Zip code

VILLAGE OF WESLEY HILLS

432 Route 306
Wesley Hills, New York 10952
(845) 354-0400 Fax: (845) 354-4097

AFFIDAVIT OF OWNERSHIP

STATE OF ~~NEW YORK~~ NJ }
COUNTY OF ~~ROCKLAND~~ Bergen } SS: Englewood Cliffs
VILLAGE OF WESLEY HILLS }

Mark Friedman being duly sworn, deposes and says that he/she resides at 12A Martha Road Wesley Hills, NY 10952 in the County of Rockland, State of New York; that he/she is the owner in fee of all that certain lot, piece or parcel of land situated, lying and being in the Village of Wesley Hills, and designated on the Town of Ramapo Map as Section No. 41.14-1 Lot No. 62 and that he/she hereby authorizes the attached application to be submitted in his/her behalf and that the statements of fact contained in said application are true.

The applicant is the (owner) (contract vendee) of the said property.

PLEASE SIGN HERE

Owner: [signature]

Address: 12A Martha Road
Wesley Hills, NY 10952

Sworn to before me this

6 day of March 2025

[signature]
Notary Public

CAROLE R. KISS
NOTARY PUBLIC - STATE OF NEW JERSEY
COMM #50044607
My Commission Expires August 25, 2026

This property is within **500 feet** of:
(Check all that apply)

IF ANY ITEM IS CHECKED, A REVIEW MUST BE DONE BY THE ROCKLAND COUNTY COMMISSIONER OF PLANNING UNDER THE STATE GENERAL MUNICIPAL LAW, SECTIONS 239 K, L, M, AND N.

X State or County Road
____ County/State Land or Right-of-Way
X Municipal Boundary
____ State or County Park
____ County Stream
____ County Facility

List name(s) of facility checked above. RC Route 80/Grandview Avenue
Montebello and unincorporated Town of Ramapo

Location of Parcel(s) _____

Referral Agencies: ***(Please check with the Village Office*** *to make sure that the appropriate agencies, as needed, receive copies of your* ***application and plans*** *for their review.)*

X RC Highway Department
____ RC Drainage Agency
____ RC Soil and Water Cons. Dist.
____ NYS Dept. of Transportation
____ RC Sewer District #1
____ Rockland County 911
____ Town of Ramapo Dept. of Public Works
____ RC Dept. of Planning
____ RC Dept. of Environmental Health
____ NYS Dept. of Environmental Conservation
____ Town of Ramapo Building Dept.

Adjacent Municipality Village of Montebello, Town of Ramapo

(AS APPLICABLE)

TO ALL APPLICANTS - YOU MUST SEND A COPY OF APPLICATIONS AND PLANS TO:

Regional Manager
Orange and Rockland
75 West Route 59
Spring Valley, NY 10977

I have informed the above checked agencies and Orange and Rockland on _____.

PLEASE SIGN HERE

Signature

March 6, 2025
Date

Applicant's Signature and Certification

State of ~~New York~~ NJ)
County of ~~Rockland~~ Bergen) SS.:
Town/Village of Englewood Cliffs)

I, Mark Friedman, hereby depose and say that all the above statements contained in the papers submitted herewith are true.

PLEASE SIGN HERE

Mailing Address

12A Martha Road
Wesley Hills, NY 10952

SWORN to before this
17 day of March, 20 25

Notary Public

CAROLE R. KISS
NOTARY PUBLIC - STATE OF NEW JERSEY
COMM #50044607
My Commission Expires August 25, 2026

Owner/Applicant's Consent Form to Visit Property

I, Mark Friedman, owner/applicant of the property described in application submitted to the town/village board, planning board, zoning board of appeals, and/or supporting staff, do hereby give permission to members of said boards and/or supporting staff to visit the property in question for the purposes incidental to the within application at a reasonable time during the day and upon reasonable notice to the owner or tenant in possession.

PLEASE SIGN HERE

Owner/Applicant

SWORN to before this
17 day of March, 20 25

Notary Public

CAROLE R. KISS
NOTARY PUBLIC - STATE OF NEW JERSEY
COMM #50044607
My Commission Expires August 25, 2026

Affidavit of Ownership/Owner's Consent

State of New York)
County of Rockland) SS.:
Town/Village of _____)

I, Mark Friedman being duly sworn, hereby depose and say that I reside at: 12A Martha Road, Wesley Hills

in the county of Rockland in the state of New York.

I am the (*XXXXXXXXXXXXXXXXXXXXXX) owner in fee simple of premises located at:
12A Martha Road, Wesley Hills

described in a certain deed of said premises recorded in the Rockland County Clerk's Office in Instrument Number 2020-1027

Said premises have been in my/its possession since 2020. Said premises are also known and designated on the Town of Ramapo

Tax Map Lot – No. 41.14-1-62 Map Date 02/2024

Current Zoning R-50

I hereby authorize the within application on my behalf, and that the statements of fact contained in said application are true, and agree to be bound by the determination of the board. Also, I do hereby give permission to the Village of Wesley Hills, its agents, servants and employees to enter upon the above described property solely for the purposes incidental to the within application at reasonable times upon reasonable notice to the owner or tenant in possession.

PLEASE SIGN HERE

Owner

Mailing Address 12A Martha Road
Wesley Hills, NY 10952

SWORN to before this
6 day of March, 2025

Carole Kiss
Notary Public

CAROLE R. KISS
NOTARY PUBLIC - STATE OF NEW JERSEY
COMM #50044607
My Commission Expires August 25, 2026

* *If owner is a corporation, fill in the office held by deponent and name of corporation, and provide a list of all directors, officers and stockholders owning more than 5% of any class of stock.*

Affidavit Pursuant to Section 809 of the General Municipal Law

State of New York)
County of Rockland) SS.:
Town/Village of _____)

I, Mark Friedman, being duly sworn, hereby depose and say that all the following statements and the statements contained in the papers submitted herewith are true and that the nature and extent of any interests set forth are disclosed to the extent that they are known to the applicant.

1. Print or type full name and post office address
Mark and Devorah Friedman
12A Martha Road
Wesley Hills, NY 10952

certifies that he is owner or agent of all that certain lot, piece or parcel of land and/or building described in this application **and if not the owner that he has been duly and properly authorized to make this application and to assume responsibility for the owner** in connection with this application for the relief below set forth:

2. To the Planning Board of the Town/Village of
(Board, Commission or Agency)
Wesley Hills, Rockland County, New York:

Application, petition or request is hereby submitted for:

( ) Variance or modification from the requirement of Section _____;
(x) Special permit per the requirements of Section 230-14.O(4)(b);
( ) Review and approval of proposed subdivision plat;
( ) Exemption from a plat or official map;
( ) An order to issue a certificate, permit or license;
( ) An amendment to the Zoning Ordinance or Official Map or change thereof;
( ) Other (*explain*) _____;

To permit construction, maintenance and use of a Tennis Court accessory to a single-family dwelling
(greater than 2500sf)

3. Premises affected are in a R-50 zone and from the town of
Ramapo tax map, the property is know as:
Tax Map Lot – No. 41.14-1-62

4. There is no state officer, Rockland County Officer or employee or town/village officer or employee nor his or her spouse, brother, sister, parent, child or grandchild, or a spouse of any of these relatives who is the applicant or who has an interest in the person, partnership or association making this application, petition or request, or is an officer, director, partner or employee of the applicant, or that such officer or employee, if this applicant is a corporation, legally or beneficially owns or controls any stock of the applicant in excess of 5% of the total of the corporation if its stock is listed on the New York or American Stock Exchanges; or is a member or partner of the applicant, if the applicant is an association or a partnership; nor that such town/village officer or employee nor any member of his family in any of the foregoing classes is a party to an agreement with the applicant, express or implied, whereby such officer or employee may receive any payment or other benefit, whether or not for service rendered, which is dependent or contingent upon the favorable approval of this application, petition or request.

5. That to the extent that the same is known to your applicant, and to the owner of the subject premises **there is disclosed herewith** the interest of the following officer or employee of the State of New York or the County of Rockland or of the Town/Village of Wesley Hills in the petition, request or application or in the property or subject matter to which it relates:

(if none, so state)

a. Name and address of officer or employee NONE

b. Nature of interest _____

c. If stockholder, number of shares _____

d. If officer or partner, nature of office and name of partnership _____

e. If a spouse or brother, sister, parent, child, grandchild or the spouse of any of these blood relatives of such state, county or town/village officer or employee, state name and address of such relative and nature of relationship to officer and employee and nature and extent of office, interest or participation or association having an interest in such ownership or in any business entity sharing in such ownership. _____

f. In the event of corporate ownership: A list of all directors, officers and stockholders of each corporation owning more than five (5%) percent of any class of stock, must be attached, if any of these are officers or employees of the State of New York, or of the County of Rockland, or of the ~~Town/~~Village of Wesley Hills.

I, Mark Friedman, do hereby depose and say that all the above statements and statements contained in the papers submitted herewith are true, knowing that a person who knowingly and intentionally violates this section is guilty of a misdemeanor.

PLEASE SIGN HERE

Mailing Address

12A Martha Road

Wesley Hills, NY 10952

SWORN to before this

6 day of March, 20 25

Notary Public

CAROLE R. KISS
NOTARY PUBLIC - STATE OF NEW JERSEY
COMM #50044607
My Commission Expires August 25, 2026

DISCLAIMER

APPLICANT TAKES FULL RESPONSIBILITY FOR RESEARCHING THE TAX MAP FOR THE LIST OF NAMES OF PROPERTY OWNERS ON THE ENCLOSED ***AFFIDAVIT OF MAILING LIST***, AND SUPPLYING THE NECESSARY AMOUNT OF LABELED STAMPED ENVELOPES.

THE APPLICANT'S ENVELOPES MUST COINCIDE WITH THE LIST. THE CLERK'S RESPONSIBILITY IS LIMITED TO CHECKING NAMES ON THE ENVELOPES AGAINST THE AFOREMENTIONED AFFIDAVIT BEFORE MAILING THEM.

RECEIPT OF THIS DISCLAIMER IS ACKNOWLEDGED

PLEASE SIGN HERE

APPLICANT

March 6, 2025

DATED

AFFIDAVIT

State of ~~New York~~) NJ
Bergen ~~County of Rockland~~) SS.: Englewood Cliffs
Town/Village of _____)

I, Mark Friedman being duly sworn deposes and says that he is the applicant, agent or attorney for applicant, in the matter of the petition before the Planning Board *(board)* in the town/village of Wesley Hills affecting property located at 12A Martha Road, Rockland County, New York.

That the following are all of the owners of property 500 **feet** *(distance)* from the premises as to which this application is being taken.

SECTION/BLOCK/LOT	NAME	ADDRESS
Please see attached list		

SWORN to before this

PLEASE SIGN HERE

6 day of March, 20 25

Carole Kiss
Notary Public

CAROLE R. KISS
NOTARY PUBLIC - STATE OF NEW JERSEY
COMM #50044607
My Commission Expires August 25, 2026

VILLAGE OF WESLEY HILLS
432 Route 306
Wesley Hills, New York 10952
(845) 354-0400 Fax: (845) 354-4097

AFFIDAVIT OF POSTING

STATE OF NEW YORK }
COUNTY OF ROCKLAND } SS:
VILLAGE OF WESLEY HILLS }

_____being duly sworn, deposes and says that he/she is the applicant in the matter of an application before the Village of Wesley Hills Planning Board affecting property located at_____, Wesley Hills, Town of Ramapo, Rockland County, New York.

That on the_____day of _____20__, he/she posted the posters provided by the Planning Board of the Village of Wesley Hills giving notice of the hearing on this application in a conspicuous place visible from every street along the frontage of the plot affected by this application.

_____
Signature of Applicant

Sworn to before me this

_____day of _____20____

_____
Notary Public

AS APPLICABLE, COMPLETE THE FOLLOWING:

1) SHORT ENVIRONMENTAL ASSESSMENT FORM
2) FULL ENVIRONMENTAL ASSESSMENT FORM

*For **access** to the above State Environmental Quality Review forms:*

http://www.dec.ny.gov/permits/6191.html

Staples. label size 1" x 2-5/8" compatible with Avery® 5160/8160 04A-U1

11/41.14-1-64
9 MARTHA ROAD LLC
1076 EAST 23RD ST
BROOKLYN, NY 11210

11/41.14-1-68
GOLDA JANICE TRUST
16 MARTHA RD
MONSEY, NY 10952

11/41.14-1-67
JOSEPH ZVI
17 MARTHA RD
MONSEY, NY 10952

11/41.18-1-48
CHANDOHA HELEN
JARAPOLK
5 MARTHA RD
MONSEY, NY 10952

11/41.18-1-26
ELBOGEN AARON & JACOB
1669 50TH ST
BROOKLYN, NY 11204

11/41.18-1-27
WEINBERGER JACOB & FAGIE
21 JUDITH LA
MONSEY, NY 10952

11/41.18-1-28
PARNES JOSEPH FAMILY
TRUST THE
6 MARTHA ROAD
MONSEY, NY 10952

11/41.18-1-49
SONTAG ISRAEL
7 MARTHA RD
MONSEY, NY 10952

11/41.18-1-2
ZELINGER MARYAM
8 MARTHA RD
MONSEY, NY 10952

11/41.18-1-6
KATZ LARRY & SARAH
16 JUDITH LANE
MONSEY, NY 10952

11/41.18-1-5
BEREN NOAH & CHAYA MEIRA
RIEDER
18 JUDITH LA
MONSEY, NY 10952

11/41.18-1-4
FRIEDMAN MARK & DEVORAH
1076 E 23RD ST
BROOKLYN, NY 11210

11/41.18-1-3
WOLF LISA &
FIALKOFF JEFFERY & IRIS
22 JUDITH LANE
MONSEY, NY 10952

11/41.18-1-1
10 MARTHA ROAD LLC
1076 EAST 23RD ST
BROOKLYN, NY 11210

11/41.14-1-65
WINTER JANET & HARVEY
11 MARTHA RD
MONSEY, NY 10952

11/41.14-1-63
ROZENBERG MICHAEL &
VIVIAN
12 MARTHA ROAD
MONSEY, NY 10952

11/41.14-1-62
FRIEDMAN MARK & DEVORAH
1076 E 23RD ST
BROOKLYN, NY 11210

11/41.14-1-69
KATZ LARRY & SARAH
79 FORSHAY RD
MONSEY, NY 10952

11/41.14-1-66
CONG K'HAL CHASIDIM
STE 1
1985 CEDAR BRIDGE AVE
LAKEWOOD, NJ 08701

11/41.14-1-60.2
BARNETT AYALA
45 WILDER RD
MONSEY, NY 10952

11/41.14-1-60.1
BARNETT AYALA
26 ASTOR PL
MONSEY, NY 10952

11/41.14-1-61
194 GRANDVIEW AVENUE LLC
194 GRANDVIEW AVE
MONSEY, NY 10952

11/41.14-1-70
196 GRANDVIEW
HOLDINGS LLC
78A N BOUNDARY ROAD
JAMAICA, NY 11430

17/41.13-2-9
202 GRANDVIEW TRUST
202 GRANDVIEW AVE
MONSEY, NY 10952

17/41.13-2-8
ZILBERBERG MENDEL
206 GRANDVIEW AV
MONSEY, NY 10952

11/41.14-1-10
BARUCH YINON & SUSAN
2 GRAND PARK DR
MONSEY, NY 10952

17/41.13-2-91
GV HOLDING LLC &
GRANDVIEW ENTERPRISES LLC
% WEINBERGER
1757 E 23RD ST
BROOKLYN, NY 11229

11/41.14-1-4
GREENFIELD MARTIN &
ESTHER
1 GRAND PARK DR
MONSEY, NY 10952

11/41.14-1-11
CICES SIMON & ALTHEA
195 GRANDVIEW AV
MONSEY, NY 10952

11/41.14-1-5
ZELEFSKY DAVID &
CHANA
3 GRAND PARK DR
MONSEY, NY 10952

Staples. label size 1" x 2-5/8" compatible with Avery® 5160/8160 04A-U1

12A Martha
03/2025 1002

Item 2.

Staples.

label size 1" x 2-5/8" compatible with Avery® 5160/8160

04A-U1

11/41.14-1-12
GREYSTONE LEXINGTON
TERRACE REALTY LLC
152 WEST 57 ST. 60TH FLOOR
NEW YORK, NY 10019

11/41.14-1-3
LWD FAMILY HOLDINGS LLC
ATT: HUDI SIMCHA
1985 CEDAR BRIDGE AVE
LAKEWOOD, NJ 08701

Staples.

label size 1" x 2-5/8" compatible with Avery® 5160/8160

12A Martha
03/2025 2002

04A-U1

SURVEY NOTES:

1. IT IS A VIOLATION OF THE STATE EDUCATION LAW SECT 7209 (2) FOR ANY PERSON, UNLESS ACTING UNDER THE DIRECTION OF A LICENSED LAND SURVEYOR, TO ALTER AN ITEM IN ANY WAY ONLY COPIES OF THIS SURVEY MARKED WITH THE LAND SURVEYOR'S SIGNATURE AND AN ORIGINAL EMBOSSED SEAL ARE A VALID ORIGINAL PRODUCT OF THE LAND SURVEYOR. THIS SURVEY IS PREPARED ONLY FOR THE PARTIES AND PURPOSE INDICATED HEREON ANY CLAIM FOR LIABILTY SHALL NOT EXCEED THE AMOUNT OF THE AGREEMENT ANY EXTENSION OF USE BEYOND THE PURPOSE AGREED TO BETWEEN THE CLIENT AND THE SURVEYOR EXCEEDS THE SCOPE OF THE ENGAGEMENT HOLDS THE SURVEYOR HARMLESS FOR UNAUTHORIZED USE BY OTHER PARTIES PERSONS OR GOVERNMENTAL APPROVALS AND RENDERS THIS SURVEY MAP NULL & VOID. THIS SURVEY MAP IS SUBJECT TO AN ACCURATE ABSTRACT OF TITLE.

2. THIS SURVEY MAP IS BASED ON AN ACTUAL FIELD SURVEY CONDUCTED FOR A SPECIFIC PURPOSE AND IS BASED ON SPECIFIC CONTRACTUAL REQUIREMENTS FOR THIS TRANSACTION. USE OF THIS MAP FOR SURVEY INSPECTION UPDATES IS STRICTLY PROHIBITED. THIS MAP MAY NOT BE COPIED IN WHOLE OR IN PART. THIS MAP MAY NOT BE USED FOR OTHER PURPOSES OR TRANSACTIONS. THIS MAP MAY NOT BE SOLD, RENTED, LEASED, PHOTOCOPIED, ENLARGED, REDUCED, TRACED OR TRANSFERED IN ANY OTHER WAY WITHOUT THE PRIOR WRITTEN CONSENT OF A CIVIL TEC ENGINEERING & SURVEYING PC REPRESENTATIVE WHO'S SIGNATURE & SEAL APPEAR HEREON.

3. PROPERTY CORNER MARKERS WERE NOT INSTALLED AS PART OF THIS SURVEY.

4. VERTICAL DATUM IS NAVD88.

REFERENCES

1. *BEING SECTION 41.14, BLOCK 1, LOT 62 OF THE VILLAGE OF WESLEY HILLS AND TOWN OF RAMAPO TAX MAPPING.*
2. *LOT DESCRIBED BY DEED IN INSTRUMENT NO. 2020 AT PAGE 1027 AT THE ROCKLAND COUNTY CLERKS OFFICE.*
3. *BEING LOT 1 ON A MAP ENTITLED "ARNOLD C. GILBERT", FILED IN THE ROCKLAND COUNTY CLERKS OFFICE ON OCTOBER 12, 1973 IN BOOK 86 ON PAGE 42 AS MAP NUMBER 4464.*
4. *TOTAL AREA = 80,253 SQUARE FEET OR 1.8424 ACRES.*

DATE	ISSUE	DESCRIPTION	REVISIONS

S.B.L. 41.14 - 1 - 62

SURVEY MAP
FOR
12A MARTHA ROAD

VILLAGE OF WESLEY HILLS - ROCKLAND COUNTY - NEW YORK

CIVIL TEC Engineering & Surveying PC
139 Lafayette Avenue, 2nd Fl.
Suffern, NY 10901
P 845.547.2241 - F 845.547.2243
111 Main Street
Chester, NY 10918
845.610.3621
Civil Engineering & Land Surveying Services that Build Communities
www.Civil-Tec.com

DATE:	7/06/20
DRAWN BY:	WPD
CHKD BY:	SPD
JOB No.	3814
SCALE:	1"=20'
DWG No.	1 OF

STEPHEN P. DOLSON, P.L.S.
N.Y. Lic. No. 50554

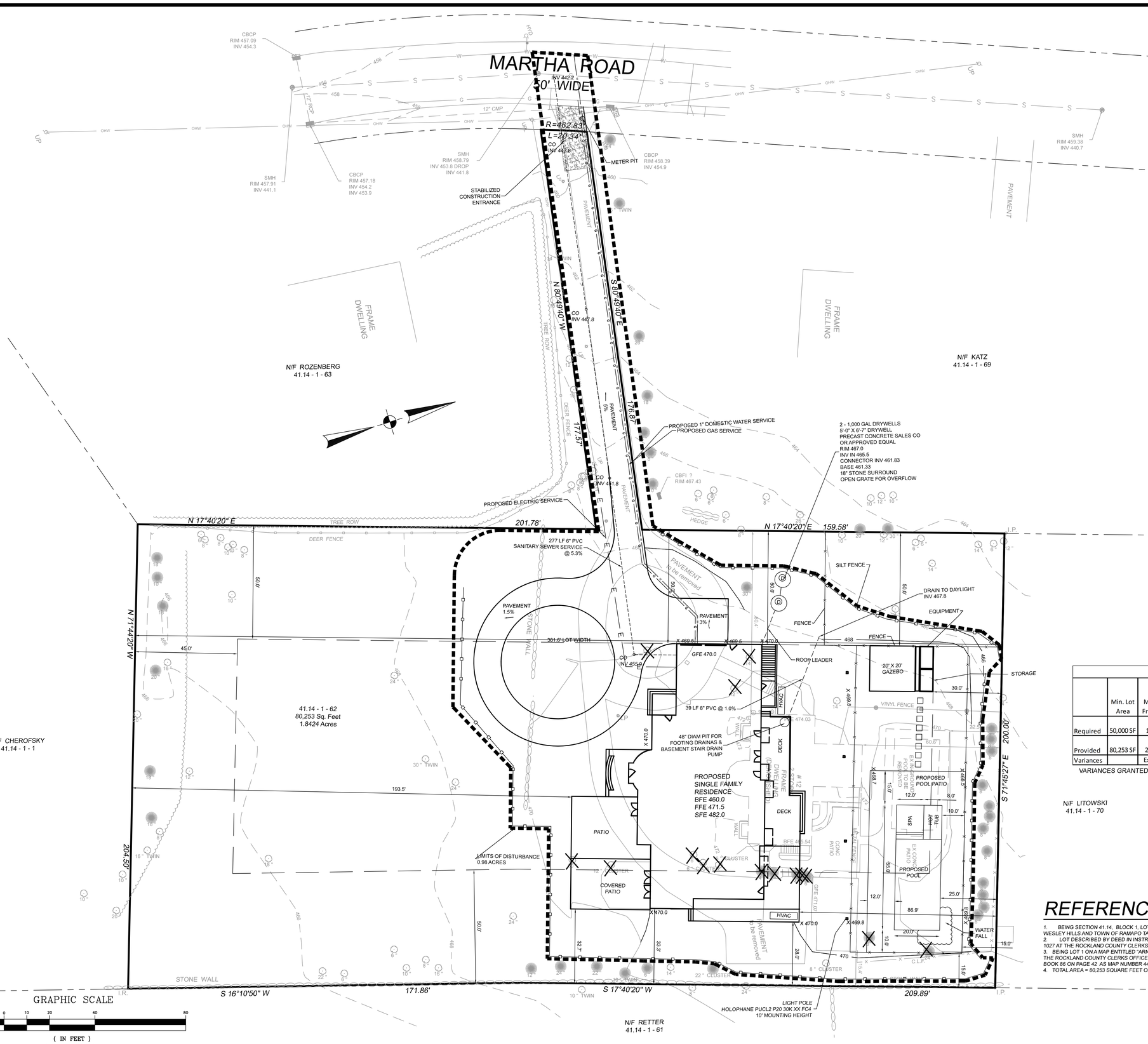

VICINITY MAP

1" = 300'

GENERAL NOTES

1. BASED ON THE VILLAGE OF WESLEY HILLS TAX MAP, THIS LOT IS 62 ON MAP 41.14 BLOCK 1.
2. AREA OF TRACT: 80,253 SQ FT OR 1.8424 AC
3. ZONE: R-50
4. NUMBER OF PROPOSED LOTS: 1
5. RECORD OWNER: DEVORAH & MARK FRIEDMAN
   12A MARTHA ROAD
   MONSEY, NY 10952
6. APPLICANT: SAME
7. EXISTING USE: RESIDENTIAL
8. PROPOSED USE: SINGLE FAMILY RESIDENCE
9. THIS PLAT DOES NOT CONFLICT WITH THE OFFICIAL COUNTY MAP AND HAS BEEN APPROVED IN THE MANNER SPECIFIED BY SECTION 239N OF THE GENERAL MUNICIPAL LAW.
10. ALL HOUSES TO BE SEWERED BY GRAVITY WITH A MIN. SLOPE OF 2%.
11. THE INDIVIDUAL LOTS ARE DESIGNATED WITH THE TAX LOT NUMBER SHOWN THUS
12. 3/4" CORNER IRON PIPES TO BE SET BEFORE C.O. IS ISSUED.
13. ALL NEW UTILITIES TO BE UNDERGROUND.
14. FIRE DISTRICT – MOLESTON
15. SCHOOL DISTRICT – SUFFERN CENTRAL
16. WATER DISTRICT – RAMAPO CONSOLIDATED WATER DISTRICT. WATER SUPPLY BY SUEZ WATER
17. ALL ELEVATIONS SHOWN ARE BASED ON U.S.C. & G.S. DATUM.
18. ELECTRIC DISTRICT – ORANGE & ROCKLAND
19. SEWER DISTRICT – BENEFITED AREA NO. 5
20. THERE ARE NO COVENANTS, DEED RESTRICTIONS, EASEMENTS, OR OTHER RESERVATIONS OF LAND RELATIVE TO THIS SITE, EXCEPT AS SHOWN ON THIS MAP, SUBJECT TO THE FINDINGS OF A COMPLETE AND UP TO DATE TITLE REPORT.
21. BASEMAP FROM A SURVEY COMPLETED BY CIVIL TEC ENGINEERING & SURVEYING PC DATED JULY 6, 2020.
22. ALL FOOTING DRAINS SHALL BE PUMPED AND DAYLIGHTED.
23. BASEMENT SHALL HAVE A ZOELLER 1/2 HP SUBMERSIBLE SUMP PUMP OR APPROVED EQUAL.

IMPERVIOUS IN FRONT YARD:
4,347 SF (DRIVEWAY)

AREA OF FRONT YARD: 22,624 SF

FRONT YARD IMPERVIOUS RATIO:
4,347 SF IMPERVIOUS/22,624 SF = 0.19

BUILDING COVERAGE CALCULATION:
9,371 SF TOTAL LIVING FLOOR AREA
TOTAL FLOOR AREA INCLUSIVE: 9,766 SF
3,272 SF IN SINGLE STORY HEIGHT (GAZEBO INCLUDED)
3,272 SF/8,805 (5,533 SF IN TWO STORY HEIGHT) TOTAL
BUILDING AREA = 0.37
0.37 X 0.05 = 0.0185
0.0185 + 0.10 = 0.1185
80,253 SF (LOT AREA) X 0.1185 = 9,509.98 SF MAXIMUM ALLOWABLE BUILDING COVERAGE
PROVIDED BUILDING COVERAGE
8,805 SF TOTAL BUILDING COVERAGE < 9,509.98 SF MAXIMUM BUILDING COVERAGE ALLOWED
0.110 < 0.1185

**ALL EXISTING STRUCTURES ARE TO BE REMOVED*

LOT COVERAGE:

DRIVEWAY	*5,446 SF*
DWELLING	*5,275 SF*
GAZEBO, POOL EQUIPMENT	*560 SF*
POOL, SPA, HOT TUB	*1,100 SF*
POOL PATIO	*2,260 SF*
WALKWAYS, WINDOW WELLS, STAIRS, TERRACES, ETC.	*2,558 SF*
TOTAL	*17,199 SF*

TOTAL IMPERVIOUS COVERAGE:

17,199 SF/80,253 SF = 0.21

NO STEEP SLOPES

PARKING CALCULATION:
SINGLE FAMILY HOME REQUIRES 2 SPACES
2 GARAGE SPACES PROVIDED

Bulk Requirements: R-50 Single Family Residence

	Min. Lot Area	Min. Lot Frontage	Min. Lot Width	Min. Front Yard	Min. Side Yard	Min. Total Side Yard	Min. Rear Yard	Max. Impervious Surface Ratio	Max. Front Yard Impervious Surface Ratio	Max. Building Coverage	Max. Building Height	Max. Exposed Building Height
Required	50,000 SF	100 FT	150 FT	50 FT	30 FT	75 FT	50 FT	0.2	0.15	0.1185	2.5 stories/ 25 FT	40 FT
Provided	80,253 SF	20.3 FT	381.6 FT	50 FT	87 FT	281 FT	28 FT	0.21	0.19	0.11	2 stories/ 23 FT	40 FT
Variances		Existing					Yes	Yes	Yes			

VARIANCES GRANTED ON SEPTEMBER 16, 2020

REFERENCES

1. *BEING SECTION 41.14, BLOCK 1, LOT 62 OF THE VILLAGE OF WESLEY HILLS AND TOWN OF RAMAPO TAX MAPPING.*
2. *LOT DESCRIBED BY DEED IN INSTRUMENT NO. 2020 AT PAGE 1027 AT THE ROCKLAND COUNTY CLERKS OFFICE.*
3. *BEING LOT 1 ON A MAP ENTITLED "ARNOLD C. GILBERT", FILED IN THE ROCKLAND COUNTY CLERKS OFFICE ON OCTOBER 12, 1973 IN BOOK 86 ON PAGE 42 AS MAP NUMBER 4464.*
4. *TOTAL AREA = 80,253 SQUARE FEET OR 1.8424 ACRES.*

DATE	ISSUE	DESCRIPTION
NOVEMBER 15, 2021	REV 4	REV PER VILLAGE ENGINEER'S COMMENTS
OCTOBER 27, 2021	REV 3	REV PER VILLAGE ENGINEER'S COMMENTS
OCTOBER 14, 2021	REV 2	REV PER SOIL TESTING
OCTOBER 6, 2021	REV 1	REV PER VILLAGE ENGINEER'S COMMENTS

REVISIONS

S.B.L. 41.14 - 1 - 62

BUILDING PERMIT PLAN APPROVED 2021
FOR
12A MARTHA ROAD

VILLAGE OF WESLEY HILLS - ROCKLAND COUNTY - NEW YORK

CIVIL TEC Engineering & Surveying PC
139 Lafayette Avenue, 2nd Fl.
Suffern, NY 10901
P 845.547.2241 - F 845.547.2243
111 Main Street
Chester, NY 10918
845.610.3621
Civil Engineering & Land Surveying Services that Build Communities
www.Civil-Tec.com

DATE:	12/7/2020
DRAWN BY:	RB/LT
CHKD BY:	RB/LT
JOB No.	3814
SCALE:	1"=20'
DWG No.	2 OF

Rachel B. Barese, P.E.
N.Y. Lic. No. 90143

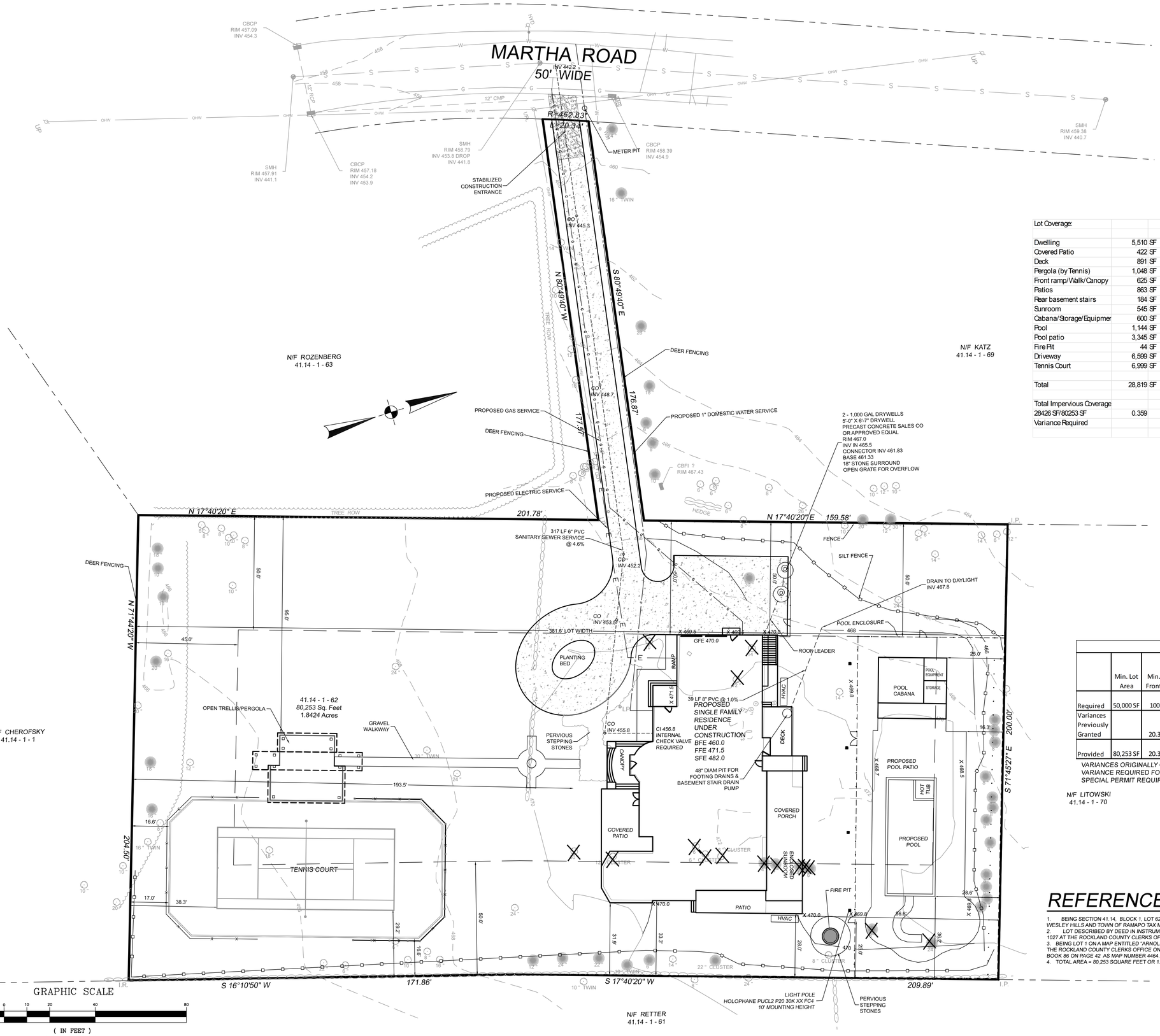

GRAPHIC SCALE

20 0 10 20 40 80

(IN FEET)
1 inch = 20 ft.

Lot Coverage:		
Dwelling	5,510	SF
Covered Patio	422	SF
Deck	891	SF
Pergola (by Tennis)	1,048	SF
Front ramp/Walk/Canopy	625	SF
Patios	863	SF
Rear basement stairs	184	SF
Sunroom	545	SF
Cabana/Storage/Equipmer	600	SF
Pool	1,144	SF
Pool patio	3,345	SF
Fire Pit	44	SF
Driveway	6,599	SF
Tennis Court	6,999	SF
Total	28,819	SF
Total Impervious Coverage		
28426 SF/80253 SF	0.359	
Variance Required		

VICINITY MAP

1" = 300'

GENERAL NOTES

1. BASED ON THE VILLAGE OF WESLEY HILLS TAX MAP, THIS LOT IS 62 ON MAP 41.14 BLOCK 1.
2. AREA OF TRACT: 80,253 SQ FT OR 1.8424 AC
3. ZONE: R–50
4. NUMBER OF PROPOSED LOTS: 1
5. RECORD OWNER: DEVORAH & MARK FRIEDMAN
   12A MARTHA ROAD
   MONSEY, NY 10952
6. APPLICANT: SAME
7. EXISTING USE: RESIDENTIAL
8. PROPOSED USE: SINGLE FAMILY RESIDENCE
9. THIS PLAT DOES NOT CONFLICT WITH THE OFFICIAL COUNTY MAP AND HAS BEEN APPROVED IN THE MANNER SPECIFIED BY SECTION 239N OF THE GENERAL MUNICIPAL LAW.
10. ALL HOUSES TO BE SEWERED BY GRAVITY WITH A MIN. SLOPE OF 2%.
11. THE INDIVIDUAL LOTS ARE DESIGNATED WITH THE TAX LOT NUMBER SHOWN THUS
12. 3/4" CORNER IRON PIPES TO BE SET BEFORE C.O. IS ISSUED.
13. ALL NEW UTILITIES TO BE UNDERGROUND.
14. FIRE DISTRICT – MOLESTON
15. SCHOOL DISTRICT – SUFFERN CENTRAL
16. WATER DISTRICT – RAMAPO CONSOLIDATED WATER DISTRICT. WATER SUPPLY BY SUEZ WATER
17. ALL ELEVATIONS SHOWN ARE BASED ON U.S.C. & G.S. DATUM.
18. ELECTRIC DISTRICT – ORANGE & ROCKLAND
19. SEWER DISTRICT – BENEFITED AREA NO. 5
20. THERE ARE NO COVENANTS, DEED RESTRICTIONS, EASEMENTS, OR OTHER RESERVATIONS OF LAND RELATIVE TO THIS SITE, EXCEPT AS SHOWN ON THIS MAP, SUBJECT TO THE FINDINGS OF A COMPLETE AND UP TO DATE TITLE REPORT.
21. BASEMAP FROM A SURVEY COMPLETED BY CIVIL TEC ENGINEERING & SURVEYING PC DATED JULY 6, 2020.
22. ALL FOOTING DRAINS SHALL BE PUMPED AND DAYLIGHTED.
23. BASEMENT SHALL HAVE A ZOELLER 1/2 HP SUBMERSIBLE SUMP PUMP OR APPROVED EQUAL.

BUILDING COVERAGE CALCULATION:
9,371 SF TOTAL LIVING FLOOR AREA
TOTAL FLOOR AREA INCLUSIVE: 9,786 SF
3,272 SF IN SINGLE STORY HEIGHT (GAZEBO INCLUDED)
3,272 SF/8,805 (5,533 SF IN TWO STORY HEIGHT) TOTAL
BUILDING AREA = 0.37
0.37 X 0.05 = 0.0185
0.0185 + 0.10 = 0.1185
80,253 SF (LOT AREA) X 0.1185 = 9,509.98 SF MAXIMUM ALLOWABLE BUILDING COVERAGE
PROVIDED BUILDING COVERAGE
9,005 SF TOTAL BUILDING COVERAGE < 9,509.98 SF MAXIMUM BUILDING COVERAGE ALLOWED
0.112 < 0.1185

**ALL EXISTING STRUCTURES ARE TO BE REMOVED*

NO STEEP SLOPES

PARKING CALCULATION:
SINGLE FAMILY HOME REQUIRES 2 SPACES
2 GARAGE SPACES PROVIDED

FRONT YARD IMPERVIOUS
DRIVEWAY 5,300 SF
5,300 SF IMPERVIOUS/22,624 SF FRONT YARD = 0.23

Bulk Requirements: R-50 Single Family Residence

	Min. Lot Area	Min. Lot Frontage	Min. Lot Width	Min. Front Yard	Min. Side Yard	Min. Total Side Yard	Min. Rear Yard	Max. Impervious Surface Ratio	Max. Front Yard Impervious Surface Ratio	Max. Building Coverage	Max. Building Height	Max. Exposed Building Height
Required	50,000 SF	100 FT	150 FT	50 FT	30 FT	75 FT	50 FT	0.2	0.15	0.1185	2.5 stories/ 25 FT	40 FT
Variances Previously Granted		20.3 FT					33 FT	0.26	0.169			
Provided	80,253 SF	20.3 FT	381.6 FT	50 FT	25 FT	281 FT	31.9 FT	0.36	0.23	0.112	2 stories/ 23 FT	40 FT

VARIANCES ORIGINALLY GRANTED ON SEPTEMBER 16, 2020
VARIANCE REQUIRED FOR 230-14.0(6) FOR MORE THAN TWO ACCESSORY STRUCTURES.
SPECIAL PERMIT REQUIRED FOR AN ACCESSORY SPORTS COURT GREATER THAN 2,500 SF

REFERENCES

1. BEING SECTION 41.14, BLOCK 1, LOT 62 OF THE VILLAGE OF WESLEY HILLS AND TOWN OF RAMAPO TAX MAPPING.
2. LOT DESCRIBED BY DEED IN INSTRUMENT NO. 2020 AT PAGE 1027 AT THE ROCKLAND COUNTY CLERKS OFFICE.
3. BEING LOT 1 ON A MAP ENTITLED "ARNOLD C. GILBERT", FILED IN THE ROCKLAND COUNTY CLERKS OFFICE ON OCTOBER 12, 1973 IN BOOK 86 ON PAGE 42 AS MAP NUMBER 4464.
4. TOTAL AREA = 80,253 SQUARE FEET OR 1.8424 ACRES.

DATE	ISSUE	DESCRIPTION
JANUARY 17, 2025	REV 7	REV FOR ZBA
DECEMBER 31, 2024	REV 6	REV UTILITIES
AUGUST 7, 2024	REV 5	REV FOR TENNIS COURT
NOVEMBER 15, 2021	REV 4	REV PER VILLAGE ENGINEER'S COMMENTS
OCTOBER 27, 2021	REV 3	REV PER VILLAGE ENGINEER'S COMMENTS
OCTOBER 14, 2021	REV 2	REV PER SOIL TESTING
OCTOBER 6, 2021	REV 1	REV PER VILLAGE ENGINEER'S COMMENTS

REVISIONS

S.B.L. 41.14 - 1 - 62

BUILDING PERMIT PLAN
FOR
12A MARTHA ROAD

VILLAGE OF WESLEY HILLS - ROCKLAND COUNTY - NEW YORK

CIVIL TEC Engineering & Surveying PC
139 Lafayette Avenue, 2nd Fl.
Suffern, NY 10901
P 845.547.2241 - F 845.547.2243
111 Main Street
Chester, NY 10918
845.610.3621
Civil Engineering & Land Surveying Services that Build Communities
www.Civil-Tec.com

DATE:	12/7/2020
DRAWN BY:	RB/LT
CHKD BY:	RB/LT
JOB No.	3814
SCALE:	1"=20'
DWG No.	3 OF

Rachel B. Barese, P.E.
N.Y. Lic. No. 90143

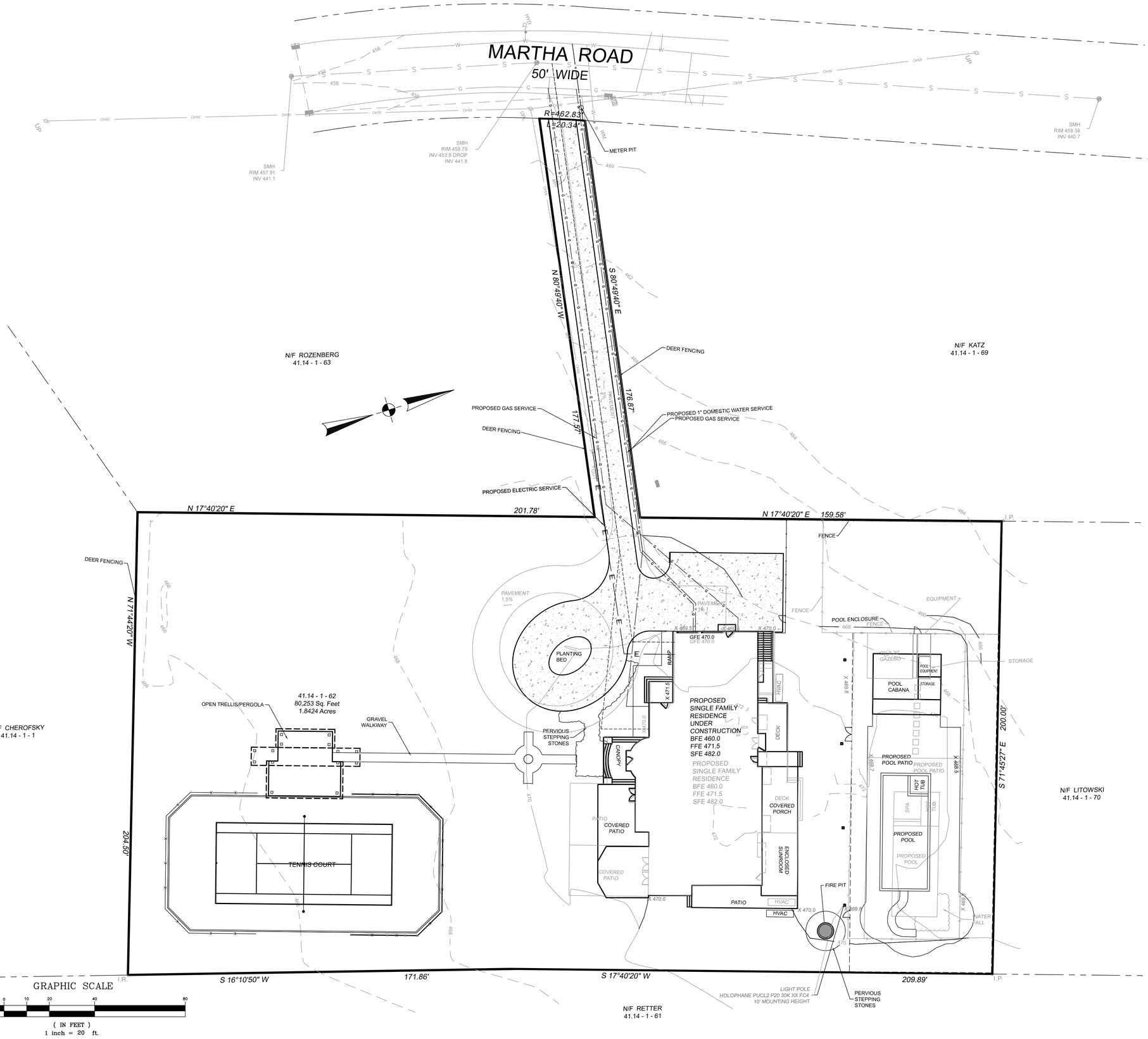

DATE	ISSUE	DESCRIPTION	REVISIONS
JANUARY 17, 2025	REV 2	REV FOR ZBA	
DECEMBER 31, 2024	REV 1	REV UTILITIES	

S.B.L. 41.14 - 1 - 62

OVERLAY PLAN
FOR
12A MARTHA ROAD

VILLAGE OF WESLEY HILLS - ROCKLAND COUNTY - NEW YORK

CIVIL TEC Engineering & Surveying PC
139 Lafayette Avenue, 2nd Fl.
Suffern, NY 10901
P 845.547.2241 - F 845.547.2243
111 Main Street
Chester, NY 10918
845.610.3621
Civil Engineering & Land Surveying Services that Build Communities
www.Civil-Tec.com

DATE:	10/28/24
DRAWN BY:	DC
CHKD BY:	RB/LT
JOB No.	3814
SCALE:	1"=20'
DWG No.	4 OF

Rachel B. Barese, P.E.
N.Y. Lic. No. 90143

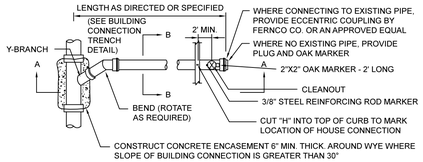

BUILDING CONNECTION PLAN

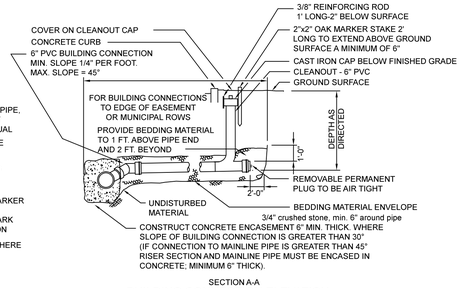

SECTION A-A

BUILDING CONNECTION ELEVATION

BUILDING CONNECTION DETAIL

N.T.S.

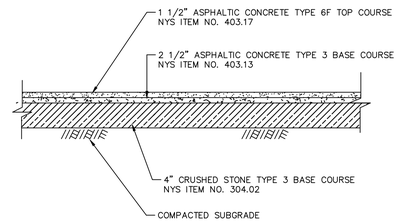

TYPICAL DRIVEWAY PAVEMENT SECTION

SCALE: N. T. S.

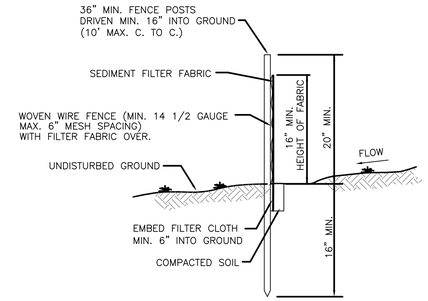

SECTION

SILT FENCE

N.T.S.

CONSTRUCTION NOTES FOR FABRICATED SILT FENCE

1. WOVEN WIRE FENCE TO BE FASTENED SECURELY TO FENCE POSTS WITH WIRE TIES OR STAPLES.
2. FILTER CLOTH TO BE FASTENED SECURELY TO WOVEN WIRE FENCE WITH TIES SPACED EVERY 24" AT TOP AND MID SECTION.
3. WHEN TWO SECTIONS OF FILTER CLOTH ADJOIN EACH OTHER THEY SHALL BE OVERLAPPED BY SIX INCHES AND FOLDED.
4. MAINTENANCE SHALL BE PERFORMED AS NEEDED AND MATERIAL REMOVED WHEN BULGES DEVELOP IN THE SILT FENCE.
5. POST TO BE STEEL EITHER "T" OR "U" TYPE OR 2" HARWOOD.
6. FILTER CLOTH TO BE MIRAFI 100X STABILINKA T140N OR APPROVED EQUAL.
7. PREFABRICATED UNIT – GEOFAB. ENVIROFENCE OR APPROVED EQUAL.

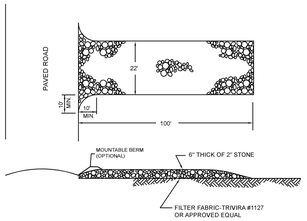

STABILIZED CONSTRUCTION ENTRANCE

N.T.S.

CONSTRUCTION SPECIFICATIONS

1. STONE SIZE – USE 2 INCHES STONE, OR RECLAIMED OR RECYCLED CONCRETE EQUIVALENT.
2. LENGTH – NOT LESS THAN 50 FEET (EXCEPT ON A SINGLE RESIDENCE LOT WHERE A 30 FOOT MINIMUM LENGTH WOULD APPLY).
3. THICKNESS – NOT LESS THAN 6 INCHES.
4. WIDTH – 12 FEET MINIMUM, BUT NOT LESS THAN THE FULL WIDTH AT POINTS WHERE INGRESS OR EGRESS OCCURS. TWENTY FOUR FEET IF SINGLE ENTRANCE TO SITE.
5. FILTER CLOTH – WILL BE PLACED OVER THE ENTIRE AREA PRIOR TO PLACING OF STONE.
6. SURFACE WATER – ALL SURFACE WATER FLOWING OR DIVERTED TOWARD CONSTRUCTION ENTRANCES SHALL BE PIPED ACROSS THE ENTRANCE. IF PIPING IS IMPRACTICAL, A MOUNTABLE BERM WITH 5:1 SLOPES WILL BE PERMITTED.
7. MAINTENANCE – THE ENTRANCE SHALL BE MAINTAINED IN A CONDITION WHICH WILL PREVENT TRACKING OR FLOWING OF SEDIMENT ONTO PUBLIC RIGHTS–OF–WAY. ALL SEDIMENT SPILLED, DROPPED, WASHED OR TRACKED ONTO PUBLIC RIGHTS–OF–WAY MUST BE REMOVED IMMEDIATELY.
8. WHEN WASHING IS REQUIRED, IT SHALL BE DONE ON AN AREA STABILIZED WITH STONE AND WHICH DRAINS INTO AN APPROVED SEDIMENT TRAPPING
9. PERIODIC INSPECTION AND NEEDED MAINTENANCE SHALL BE PROVIDED AFTER EACH RAIN.

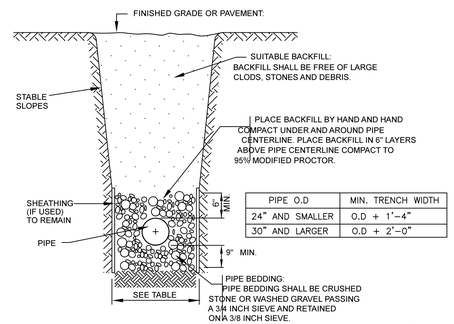

PIPE O.D	MIN. TRENCH WIDTH
24" AND SMALLER	O.D + 1'–4"
30" AND LARGER	O.D + 2'–0"

TYPICAL TRENCH DETAIL (STORM SEWER)

N.T.S.

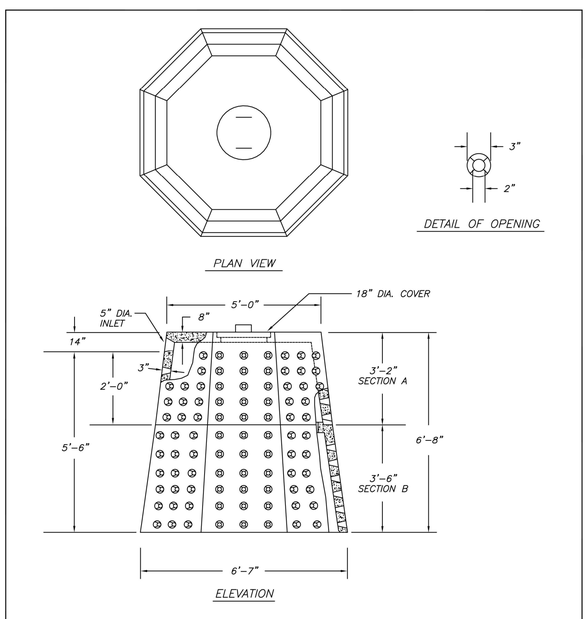

NOTES :
* CONCRETE TO TEST 4000 PSI @ 28 DAYS
* STEEL REINFORCEMENT–ASTM–A–615
* SECTION A – 370 GALLONS 6'–0" ACROSS BOTTOM WEIGHT – 2,000 LBS.
* SECTION B – 630 GALLONS 6'–7" ACROSS BOTTOM WEIGHT – 4050 LBS
* LOAD RATING – HS20

Precast Concrete Sales Co.		
123 Route 303 Valley Cottage , N.Y. 10989 Tel. (845) 268–4949 – Fax (845) 268–4376		
CONT.		
JOB		
5'–0" x 6'–7" DRYWELL TWO SECTIONS		
DATE	DRAWN BY	DRAWING NO.
02/09	AT	705–A/B

EROSION CONTROL & SEDIMENT NOTES

1. A TEMPORARY SEEDING SHALL BE APPLIED TO DISTURBED AREAS THAT ARE LEFT BARE FOR 15 DAYS UNLESS CONSTRUCTION WILL BEGIN WITHIN 30 DAYS. IF CONSTRUCTION IS SUSPENDED OR COMPLETED, AREAS SHALL BE SEEDED DOWN OR MULCHED IMMEDIATELY.
2. STRUCTURAL MEASURES MUST BE MAINTAINED TO BE EFFECTIVE. IN GENERAL, THESE MEASURES MUST BE PERIODICALLY INSPECTED TO INSURE STRUCTURAL INTEGRITY, DETECT VANDALISM DAMAGE, AND FOR CLEANING AND REPAIR WHENEVER NECESSARY.
3. DURING CONSTRUCTION, ALL STRUCTURES SHALL BE INSPECTED WEEKLY AND AFTER EVERY RAIN.
4. AFTER CONSTRUCTION, INSPECTION SHALL BE MADE AT LEAST SEMI–ANNUALLY AND AFTER EVERY RAIN.
5. THE STORM DRAIN INLET STRUCTURES SHALL BE PROTECTED WITH A FILTER BERM UNTIL THE AREA IS STABILIZED WITH VEGETATION OR THE BASE COURSE OF PAVEMENT IS INSTALLED.
6. CONSIDER LIMITING LAND DISTURBANCE TO ONLY THAT AREA NECESSARY FOR DEVELOPMENT.
7. THE MACADAM SURFACE SHALL BE SWEPT "BROOM CLEAN" AT THE END OF EACH DAY DURING THE CONSTRUCTION PHASE OF THE SIDEWALKS AND CURB.
8. A STABILIZED CONSTRUCTION ENTRANCE SHALL BE INSTALLED AT ALL POINTS WHERE A DISTURBED AREA MEETS AN IMPERVIOUS SURFACE, THIS INCLUDES ALL NEW DRIVEWAY CONNECTIONS ALONG THE NEW ROADWAY.
9. CONSTRUCTION EQUIPMENT SHALL BE LIMITED TO THOSE AREAS WITHIN THE SILT FENCE SEDIMENT PROTECTION. AT THE CONCLUSION OF CONSTRUCTION OPERATIONS, THE AREA COMPACTED BY MACHINERY SHALL BE DICED OR OTHERWISE LOOSENED TO A DEPTH OF 12 INCHES PRIOR TO FINAL GRADING WITH TOPSOIL AND SEEDING.

DATE	ISSUE	DESCRIPTION	REVISIONS
JANUARY 17, 2025	REV 7	REV FOR ZBA	
DECEMBER 31, 2024	REV 6	REV UTILITIES	
AUGUST 7, 2024	REV 5	REV FOR TENNIS COURT	
NOVEMBER 15, 2021	REV 4	REV PER VILLAGE ENGINEER'S COMMENTS	
OCTOBER 27, 2021	REV 3	REV PER VILLAGE ENGINEER'S COMMENTS	
OCTOBER 14, 2021	REV 2	REV PER SOIL TESTING	
OCTOBER 6, 2021	REV 1	REV PER VILLAGE ENGINEER'S COMMENTS	

S.B.L. 41.14 - 1 - 62

BUILDING PERMIT PLAN
FOR
12A MARTHA ROAD

VILLAGE OF WESLEY HILLS - ROCKLAND COUNTY - NEW YORK

CIVIL TEC Engineering & Surveying PC
139 Lafayette Avenue, 2nd Fl.
Suffern, NY 10901
P 845.547.2241 - F 845.547.2243
111 Main Street
Chester, NY 10918
845.610.3621
Civil Engineering & Land Surveying Services that Build Communities
www.Civil-Tec.com

DATE:	7/21/21
DRAWN BY:	RB/LT
CHKD BY:	RB/LT
JOB No.	3814
SCALE:	AS SHOWN
DWG No.	5 OF

Rachel B. Barese, P.E.
N.Y. Lic. No. 90143

Reset Save to Disk Save As...

Item 2.

Short Environmental Assessment Form
Part 1 - Project Information

Instructions for Completing

Part 1 – Project Information. The applicant or project sponsor is responsible for the completion of Part 1. Responses become part of the application for approval or funding, are subject to public review, and may be subject to further verification. Complete Part 1 based on information currently available. If additional research or investigation would be needed to fully respond to any item, please answer as thoroughly as possible based on current information.

Complete all items in Part 1. You may also provide any additional information which you believe will be needed by or useful to the lead agency; attach additional pages as necessary to supplement any item.

Part 1 – Project and Sponsor Information

Name of Action or Project:
12A Martha Road

Project Location (describe, and attach a location map):
12A Martha Road Wesley Hills, NY

Brief Description of Proposed Action:
proposed single family residence (under construction) and accessory structures (pool, pool house, tennis court)

Name of Applicant or Sponsor:	Telephone:
Devorah & Mark Friedman	E-Mail: mfriedman@careritecenters.com

Address:
12A Martha Rd

City/PO:	State:	Zip Code:
Monsey	NY	10952

	NO	YES
1. Does the proposed action only involve the legislative adoption of a plan, local law, ordinance, administrative rule, or regulation? If Yes, attach a narrative description of the intent of the proposed action and the environmental resources that may be affected in the municipality and proceed to Part 2. If no, continue to question 2.	☑	☐
2. Does the proposed action require a permit, approval or funding from any other government Agency? If Yes, list agency(s) name and permit or approval: variances-ZBA	☐	☑

3. a. Total acreage of the site of the proposed action? 1.84 acres
   b. Total acreage to be physically disturbed? 1 acres
   c. Total acreage (project site and any contiguous properties) owned or controlled by the applicant or project sponsor? 1.84 acres

4. Check all land uses that occur on, are adjoining or near the proposed action:

5. ☐ Urban ☐ Rural (non-agriculture) ☐ Industrial ☐ Commercial ☑ Residential (suburban)
   ☐ Forest ☐ Agriculture ☐ Aquatic ☐ Other(Specify):
   ☐ Parkland

Save to Disk Save As...

	NO	YES
5. Is the proposed action,		
a. A permitted use under the zoning regulations?	☐	☑
b. Consistent with the adopted comprehensive plan?	☐	☑

	NO	YES
6. Is the proposed action consistent with the predominant character of the existing built or natural landscape?	☐	☑
7. Is the site of the proposed action located in, or does it adjoin, a state listed Critical Environmental Area? If Yes, identify: _____	☑	☐
8. a. Will the proposed action result in a substantial increase in traffic above present levels?	☑	☐
b. Are public transportation services available at or near the site of the proposed action?	☑	☐
c. Are any pedestrian accommodations or bicycle routes available on or near the site of the proposed action?	☑	☐
9. Does the proposed action meet or exceed the state energy code requirements? If the proposed action will exceed requirements, describe design features and technologies: _____	☐	☑
10. Will the proposed action connect to an existing public/private water supply? If No, describe method for providing potable water: _____	☐	☑
11. Will the proposed action connect to existing wastewater utilities? If No, describe method for providing wastewater treatment: _____	☐	☑
12. a. Does the project site contain, or is it substantially contiguous to, a building, archaeological site, or district which is listed on the National or State Register of Historic Places, or that has been determined by the Commissioner of the NYS Office of Parks, Recreation and Historic Preservation to be eligible for listing on the State Register of Historic Places?	☑	☐
b. Is the project site, or any portion of it, located in or adjacent to an area designated as sensitive for archaeological sites on the NY State Historic Preservation Office (SHPO) archaeological site inventory?	☑	☐
13. a. Does any portion of the site of the proposed action, or lands adjoining the proposed action, contain wetlands or other waterbodies regulated by a federal, state or local agency?	☐	☑
b. Would the proposed action physically alter, or encroach into, any existing wetland or waterbody? If Yes, identify the wetland or waterbody and extent of alterations in square feet or acres: _____	☑	☐

14. Identify the typical habitat types that occur on, or are likely to be found on the project site. Check all that apply:

☐ Shoreline ☐ Forest ☐ Agricultural/grasslands ☐ Early mid-successional

☐ Wetland ☐ Urban ☑ Suburban

	NO	YES
15. Does the site of the proposed action contain any species of animal, or associated habitats, listed by the State or Federal government as threatened or endangered? Timber Rattlesnake	☐	☑
16. Is the project site located in the 100-year flood plan?	☑	☐
17. Will the proposed action create storm water discharge, either from point or non-point sources? If Yes,	☐	☑
a. Will storm water discharges flow to adjacent properties?	☑	☐
b. Will storm water discharges be directed to established conveyance systems (runoff and storm drains)? If Yes, briefly describe:	☑	☐
18. Does the proposed action include construction or other activities that would result in the impoundment of water or other liquids (e.g., retention pond, waste lagoon, dam)? If Yes, explain the purpose and size of the impoundment:	☑	☐
19. Has the site of the proposed action or an adjoining property been the location of an active or closed solid waste management facility? If Yes, describe:	☑	☐
20. Has the site of the proposed action or an adjoining property been the subject of remediation (ongoing or completed) for hazardous waste? If Yes, describe:	☑	☐

I CERTIFY THAT THE INFORMATION PROVIDED ABOVE IS TRUE AND ACCURATE TO THE BEST OF MY KNOWLEDGE

Applicant/sponsor/name: Civil Tec Engineering & Surveying PC Date: 3-19-25

Signature: Rachel Ba Title: Project Engineer

PRINT FORM

EAF Mapper Summary Report

Tuesday, March 18, 2025 2:03 PM

Item 2.

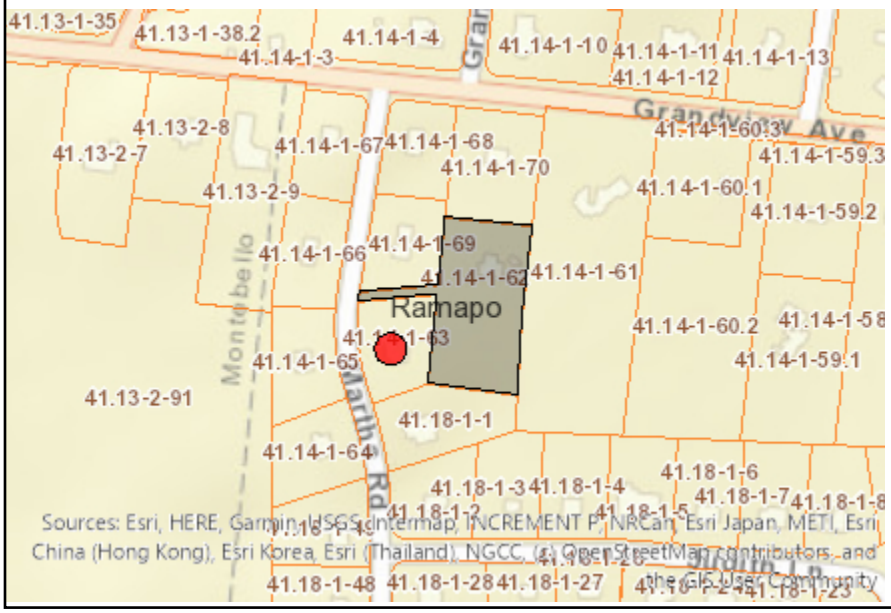

Disclaimer: The EAF Mapper is a screening tool intended to assist project sponsors and reviewing agencies in preparing an environmental assessment form (EAF). Not all questions asked in the EAF are answered by the EAF Mapper. Additional information on any EAF question can be obtained by consulting the EAF Workbooks. Although the EAF Mapper provides the most up-to-date digital data available to DEC, you may also need to contact local or other data sources in order to obtain data not provided by the Mapper. Digital data is not a substitute for agency determinations.

Part 1 / Question 7 [Critical Environmental Area]	No
Part 1 / Question 12a [National or State Register of Historic Places or State Eligible Sites]	No
Part 1 / Question 12b [Archeological Sites]	No
Part 1 / Question 13a [Wetlands or Other Regulated Waterbodies]	Yes - Digital mapping information on local and federal wetlands and waterbodies is known to be incomplete. Refer to EAF Workbook.
Part 1 / Question 15 [Threatened or Endangered Animal]	Yes
Part 1 / Question 15 [Threatened or Endangered Animal - Name]	Timber Rattlesnake
Part 1 / Question 16 [100 Year Flood Plain]	No
Part 1 / Question 20 [Remediation Site]	No

ROCKLAND COUNTY DEPARTMENT OF PLANNING
REFERRAL FORM FOR GENERAL MUNICIPAL LAW REVIEWS

Municipality: Village of Wesley Hills **Date Sent: 4/2/2025**

Board: _X_ Planning ____ ZBA _____ Town/Village **Meeting Date: 5/28/2025**

File Name **Mark Friedman**
Contact Person **Alicia Schultz, Deputy Village Clerk**
Address **432 Route 306**
Wesley Hills, NY 10952

Referral Agencies
(Please indicate the agencies that have also received copies of this application)
__X___RC Highway Department
_____ RC Division of Environmental Resources
_____RC Drainage Agency
__X___RC Department of Environmental Health (Sewers, Water, Mosquito Code, Underground Tanks)
__X___RC Sewer District #1
_____ NYS Department of Environmental Conservation
_____NYS Department of Transportation
_____ NYS Thruway Authority
_____ NY-NJ Trail Conference (Long Path)
_____ Palisades Interstate Park Commission
_____ US Army Corps of Engineers
_____ Cornell Cooperative Extension of Rockland County
__X__ Adjacent Municipality- Village of Montebello____
__X___Other- Town of Ramapo_____

Pursuant to the General Municipal Law Article 12-B, Section
239 (n): ____ Subdivision
239 (l) & (m): _X_ Site Plan __ Variance
_X_ Special Permit ___ Zone Change/Amendment
Other- _____

Location of Parcel(s):__12A Martha Road_____

Acreage of Parcel (s):___1.805_____

Existing Sq. Footage _____**Proposed Sq. Footage**_____

The Property in Question Lies Within 500 Feet of:
_X_ County Road
___ County Stream
___ County Park
___ County or State Facility
___State Road, Thruway, or Parkway
___ State Park
_X_Village, Town, or County Boundary

Map _41.14_Block_1_Lot(s)_62_ Map Date: January 17, 2025
Current Zoning: **R-50**

Brief Project Description: Construction of a tennis court larger than 2,500sq feet, which triggers the need for a special permit & approved site plan from the Village of Wesley Hills Planning Board.

<u>Variances Needed</u> (*if applicable*) **<u>Required</u>** **<u>Proposed</u>**

Rockland County

Ed Day, Rockland County Executive

ROCKLAND COUNTY SEWER DISTRICT NO. 1
4 Route 340
Orangeburg, New York 10962
Phone: (845) 365-6111 Fax: (845) 365-6686
RCSD@co.rockland.ny.us

Michael Specht
Chairman

Michael R. Saber, P.E.
Executive Director

April 11, 2025

Ms. Alicia Schultz
Deputy Village Clerk
Village of Wesley Hills
432 Route 306
Monsey, NY 10952

Re: Mark Friedman
12A Martha Road, Monsey
Tax Lot 11/41.14-1-62 (formerly 9./58/F1)

Dear Ms. Schultz:

Our office has received and reviewed an amended site plan that was last revised on January 17, 2025, which Civil Tec Engineering & Surveying prepared for the above referenced project. We thank you for the opportunity to comment on this application. Our comments are as follows:

1. Approval of this application and the variances for a single-family dwelling, cabana, a tennis court and an in-ground pool on an 80,253 square foot lot in the R-50 District does not require the applicant to pay an impact fee, in accordance with the Rockland County Sewer Use Law as last amended in 2010. **However, if the use or occupancy of the property exceeds one (1) unit (e.g., if the pool is rented out to the public, or with an apartment, a house of worship, a school, a daycare center, or a home occupation), the District will require further review and the owner will have to pay an impact fee.**

2. Please advise the property owner that Section 902(B)(19) of the *Sewer Use Law* specifically prohibits the discharge of swimming pool drainage (not filter backwash) into the sanitary sewer system.

3. Details for sanitary sewer construction must comply with the District's construction standards and should be shown on the plans.

4. Details for the sanitary sewer connections are subject to approval by the Town of Ramapo.

5. Any existing sewer connection proposed to be abandoned must be plugged between the edge of the right-of-way and the curb line with a permanent watertight plug or cap encased in concrete.

Please inform us of all developments in this project. If you have any questions, please contact this office at 845-365-6111.

Very truly yours,

Lorelei Greene Tinston
Engineer I

cc: M. Saber M. Dolphin D. Gregory
Elizabeth Mello, P.E. – Rockland County Department of Health
Michael Sadowski, P.E. – Town of Ramapo DPW
Rachel Barese, P.E. – Civil Tec Engineering & Surveying PC, 139 Lafayette Avenue, 2nd Floor, Suffern, NY 10901-5614
Mark & Devorah Friedman – 12A Martha Road, Wesley Hills, NY 10952

File: TOR 41.14-1-62 – 12A Martha Road
Reader

EMANUEL LAW P.C.

Ira M. Emanuel, Esq. | Amy Mele, Esq. *Of Counsel*
Counsel to Freeman & Loftus, RLLP

Four Laurel Road
New City, NY 10956

Info@EmanuelLaw.com

www.EmanuelLaw.com

Tel: 845-634-4141

PLANNING BOARD
VILLAGE OF WESLEY HILLS

NARRATIVE SUMMARY

YESHIVA OHR REUVEN AMENDED SITE PLAN
Tax Lot 40.06-1-17 and 18

Yeshiva Ohr Reuven ("YOR") has an existing campus at 239 Grandview Avenue. It wishes to expand its existing dormitory, add faculty housing, and add parking spaces.

Existing Conditions

The campus is located at the northwest corner of Grandview Avenue and Spook Rock Road in an R-50 zoning district. The campus has a net lot area of 536,577sf (12.32ac+/-).

The school consists of two buildings at the northern end of the campus having a total floor area of 65,000sf. This portion is served by a driveway from Grandview Avenue. A large circular pickup/dropoff area is in front of the main entrance. The driveway continues to the rear of the buildings where there is an existing parking area with 32 parking spaces. A macadam basketball court and an outdoor "gym" structure are adjacent to the parking area. The school has a current enrollment of 355 students.

Near the center of the campus, YOR has a two-story dormitory building with 36 beds. It is served by a small parking area off the main driveway. A two-story frame residence for a caretaker is near the dormitory building.

Proposed Conditions

YOR proposes a three-phased expansion: (1) expand the number of parking spaces on campus; (2) provide on-site faculty housing; and (3) create a small addition to the existing student dormitory. Information on YOR's need for these improvements is set forth in a separate narrative from YOR, submitted herewith.

(1) <u>Additional parking.</u> There are currently 63 permanent parking spaces plus 31 overflow parking spaces on the site, for a total of 94 available parking spaces. While this exceeds the number of spaces required by the Zoning Code (91) YOR has found that it is insufficient for its current and expected needs.

YOR proposes adding 51 parking spaces along the north side of the main driveway as it approaches the main parking area. This location is outside the flow of visitor parking, so most drivers in this area will be aware of the new spaces.

An additional 19 parking spaces are to be added next to the dormitory and 24 spaces at the faculty housing. The dormitory parking area will be limited to faculty and staff. (Students are not permitted to have cars on-site.) The dormitory parking area may also be used for overflow parking for special events, such as graduation and evening PTA programs. The faculty housing parking area will be limited to resident faculty.

In order to accommodate the proposed construction, ten parking spaces will be lost: six at the dormitory and four at the caretaker's residence.

Thus, a net total of 84 additional proposed parking spaces will be added, for a total of 178 spaces.

Some of the proposed parking will be paved with pervious materials, as shown on the site plan drawings.

(2) <u>On-site faculty housing.</u> Currently, there is no on-site faculty housing (although there are dormitory parents and a caretaker living on-site). Providing such housing will allow YOR to attract and retain quality faculty, and also allow greater interaction between faculty and students, particularly during out-of-classroom hours. YOR believes that such interaction will also foster a greater sense of community for the school.

YOR proposes 24 units of faculty housing, divided between two two-story buildings. Each building will have a total floor area of 14,070sf, for a combined total of 28,140sf. Each unit will be in a townhouse configuration consisting of two stories plus a basement. The housing will be located along the Grandview Avenue lot line. This location was chosen for a number of reasons. First, YOR wants to maintain the interior of its campus as open space and for recreation. Second, the lot on the opposite side of Grandview Avenue is owned by YOR, but is undevelopable since it is largely covered by DEC wetlands. Thus, no neighbors will be directly affected by housing in this location. Third, the topography in this area allows the housing to be built into the hill. This will reduce the apparent mass of the housing (mitigating its visual impact) and will retain the existing view of and from the school building.

As noted above, a dedicated parking area for the housing will be provided, with 24 parking spaces.

Faculty housing is expressly permitted by Local Law No. 1 of 2024. That local law added special permit requirements for schools with faculty housing (new § 230-26.I(17)). The special permit requirements are discussed below.

(3) <u>Student dormitory expansion.</u> There is an existing student dormitory with 36 beds. YOR proposes an addition (approx. 3,264sf) to the southeasterly side of the existing

dormitory. The addition will add 18 beds, for a total of 54 beds (50 for students, 4 for adult counselors). It will also allow the provision of two student lounges and upgrades to building and fire safety features.

Variances for the foregoing are as shown on the site plan drawings submitted herewith. The existing special permit for the school (Resolution #08-29) permits up to 380 students on site. The building capacity is 512. An amendment to the special permit may be required.

Special Permit for Faculty Housing

YOR has an existing special permit to operate as a school with a dormitory (per § 230-26.I(16). The faculty housing must meet the additional conditions of § 230-26.I(17):

(a) Applicant must be free of any local violations and be accredited by the New York State Department of Education.

Complies.

(b) Each faculty housing unit shall be set back at least 50 feet from any street and be located on the same lot as the school.

Complies. Units in the northern building are at least 55 feet from Grandview Avenue. Units in the southern building are at least 67 feet from Grandview Avenue. All units are on the same lot as other YOR facilities, including the main school building, the student dormitory, and the caretaker's house.

(c) Faculty housing shall only be approved for schools meeting all of the following requirements: 1) the school has at least four grade level classes from kindergarten through 12th grade; 2) the school has a dormitory located on the same site; 3) the school shall have been in operation within the Village for at least 10 years; and 4) the school can demonstrate the need for on-campus faculty housing to the Planning Board.

Complies. YOR provides education for students from Kindergarten through 12th grade. There is an existing 36-bed dormitory on the campus, which YOR wishes to expand with another 18 beds. YOR has operated in the Village since it received special permit and site plan approval in 1994 (Resolution Nos. 94-22 and 94-23). The need for on-campus faculty housing is discussed in the accompanying narrative from YOR.

(d) Faculty housing units shall not exceed an average of 2,250 square feet per housing unit, and no faculty housing unit shall exceed 2,500 square feet in any event.

Complies. 24 faculty housing units are proposed in two buildings having a total of 28,140sf of floor area. This translates to an average of 1,172.50sf per unit. No individual unit will exceed 2,500sf of floor area.

(e) Except as expressly stated in this Subsection I, faculty housing shall comply with the bulk regulations of the underlying zoning district, including but not limited to height and number of stories. Where there is a conflict between this subsection and the requirements pertaining to the underlying zoning district, the more restrictive requirement shall apply.

Complies. No area variances are need for the proposed faculty housing. A variance is requested for additional impervious surface associated with parking expansion.

(f) Any special permit issued to an applicant for faculty housing shall specify, as a condition thereof, the maximum number of faculty housing units authorized on the lot. In no event shall the maximum number of faculty housing units exceed any of the following limits: 1) 40% of the number of faculty members of the school as defined in this Subsection I(17)(j); 2) 7.5% of the average number of active pupils during the most recent three years prior to the application; and 3) the ratio of 2.0 units per acre of net lot area.

Complies. (1) Currently there are 134 faculty members as defined above. 40% of that number is 53.6%. 24 units are proposed.

(2) The average number of active pupils in the three most recent years prior to this application were:

2021-22: 385 pupils
2022-23: 391 pupils
2023-24: 390 pupils
Three-year average: 388.67 pupils

7.5% x three-year average: 29.15 units permitted. 24 units are proposed.

(3) The net lot area is 12.32+/- acres. At 2.0 units per acre, the allowable yield is 24.64 units. 24 units are proposed.

(g) Net lot area, as referred to in the previous paragraph, shall be calculated with the same deductions as set forth for minimum lot area in Subsections I(2) and I(3). A school containing faculty housing must satisfy all of the following requirements related to lot area: the minimum lot area requirement set forth in Subsection I(1) (which will determine the maximum number of pupils authorized to be enrolled in the school), the ratio to net lot area requirement set forth in Subsection I(17)(f) (which will determine the maximum number of authorized faculty housing units), and the net lot area requirement set forth in Subsection I(16)(b) (which will determine the maximum number of persons authorized to reside in the dormitory). The same lot area may be used to satisfy all of those requirements simultaneously.

Complies.

Section I(1) requires a minimum of ten acres plus an additional 0.01 acre for each pupil over 200 pupils. YOR has 355 pupils, or 155 pupils over 200. 155 x 0.01ac = 1.5 ac. The total lot area required is therefore 11.5 acres.

Sections I(2) and I(3) require deductions for land under water, wetlands, and steep slopes. The calculations are shown on Sheet 1 of the site plan drawings submitted herewith. The net lot area is computed as 12.3181ac (rounded to 12.32)

(h) Any application to add or include faculty housing as an accessory use to a school shall include, in addition to other items which may be required by the Planning Board, a written statement setting forth information regarding faculty residency restrictions and policies, security provisions (including, without limitation, fencing, lighting, and supervision), and emergency services.

Complies. See statement submitted herewith.

(i) In addition to any other off-street parking required for a school and accessory uses, there shall be one parking space provided for each faculty housing unit. Such parking spaces shall be in close proximity to the faculty housing units, as determined by the Planning Board.

Complies. There are 24 faculty housing units, which requires 24 parking spaces. These 24 parking spaces are located between the two housing buildings in a separate parking area reserved for building residents.

(j) Faculty housing units shall be occupied only by employed faculty members, as defined in Subsection I(17)(k), of the school being operated on the premises of which the housing units are located, and the family of such faculty member. The faculty member to whom the housing unit is assigned must occupy such unit as his or her primary residence. Only one family may occupy a faculty housing unit, irrespective of the number of family members employed as faculty members by the school.

Will comply.

(k) For purposes of this Subsection I(17), the term "faculty member" who qualifies for on-premises housing shall mean a person employed by the school on a full time or part time basis, for no fewer than 22 hours per week, and whose duties include at least one of the following: 1) providing instruction to students for at least two classes for at least one instructional semester, or 2) providing on-site physical or psychological therapeutic or support services to a student or students, or 3) administrative employees such as a principal, assistant principal or department chairperson.

Will comply.

(l) On or before September 1 of each year, the school, by one of its officers, shall submit a signed and notarized affidavit to the Village Clerk, which affidavit shall contain the following information:

[1] The name of the school.
[2] The name, position or title, and housing unit number of each faculty member occupying a faculty housing unit.
[3] Certification that the faculty member occupying the housing unit is or will be employed by the school for the upcoming school year or part thereof (if only part of the school year, the intended employment end date shall be specified).
[4] Certification that the faculty member occupying the housing unit has been expressly advised, by written notice, that his or her occupancy of the housing unit is governed by the terms of this provision of the Zoning Law and of the special permit issued by the Planning Board, is further dependent upon his or her continued employment by the school, and that the housing unit must be vacated within 30 days after termination of such employment. A copy of such written notice shall be annexed annually to the affidavit filed with the Village Clerk.
[5] In the event that there is a change in occupancy of any housing unit that is not reported on the annual filing required by Subsection I(17)(l), then within 30 days after such change the school shall file with the Village Clerk the information required in Subsection I(17)(l)[1] through [4] of this subsection with respect to such new occupant.
[6] Failure to provide the affidavit required by this Subsection I(17)(l), or the inclusion of knowingly false, inaccurate or misleading information in such affidavit, shall constitute a violation of this chapter and may constitute the basis for denial or revocation of the special permit, building permit, or certificate of occupancy for the faculty housing, and for all other applicable remedies.
[7] Payment of the annual processing fee as described in the Village of Wesley Hills Fee Schedule.

Will comply.

(m) No certificate of occupancy for any faculty housing unit shall be issued unless and until the school has been issued a certificate of occupancy.

Complies. The school has a current certificate of occupancy.

(n) If the property is sold, transferred, leased or licensed to another school and/or operator, that school and/or operator will require a new special permit (as another school may not be operating in the identical manner). If the property is sold, transferred, leased or licensed for any use other than a school, the status of the residential use of all faculty housing units on the property shall immediately expire, and there shall be no as-of-right to continue the residential use of any such units. Certificates of occupancy for all such faculty housing units shall be terminated and shall be of no force and effect without any further action by the Village.

Noted.

SEQR and GML Status

The proposal calls for an expansion of an educational use with a total floor area of 31,404sf[1]. It is therefore an Unlisted action under the SEQR regulations.[2]

The site is adjacent to two County roads: Grandview Avenue and Spook Rock Road. It is also adjacent to the boundary between the Village of Wesley Hills and the Village of Montebello. It is within 500 feet of Rockland County Route 80A and Willow Tree Brook, a Rockland County stream. The project must therefore be submitted for review by the Rockland County Planning Department under General Municipal Law §§ 239-l, -m, and -nn.

Dated: March 19, 2025
New City, New York

EMANUEL LAW P.C.

By:_____
Ira M. Emanuel, Esq.
Attorneys for Applicant

[1] Faculty housing = 28,140sf; dormitory expansion = 3,264sf.
[2] 6 N.Y.C.R.R. § 617.4(b)(6)(v) provides a 50,000sf threshold for Type I actions for expansions of existing non-residential facilities.

OHR REUVEN אור ראובן

Harav Bezalel Rudinsky
ROSH HAYESHIVA

Harav Benzion Brodie
S'GAN ROSH HAYESHIVA

LIMUDEI KODESH

Rabbi Ari Medetsky
MENAHEL, MESIVTA

Rabbi Yosef B. Rawicki
MENAHEL, YESHIVA KETANA

Rabbi Y. Bentzion Bamberger
MASHGIACH

Rabbi Raphael Vilinsky
S'GAN MENAHEL, MESIVTA

GENERAL STUDIES

Mr. Boruch Rudinsky
PRINCIPAL, MESIVTA

Rabbi Yisroel Gottlieb
PRINCIPAL, YESHIVA KETANA
ASSOCIATE PRINCIPAL, MESIVTA

Rabbi Zev Fuchs
ASSISTANT PRINCIPAL, MESIVTA

EXECUTIVE DIRECTOR

Dovid Yoseph Berman

PRESCHOOL

Mrs. Feige Bessler
PRESCHOOL CONSULTANT

SPECIAL SERVICES

Mrs. Rachel Levinger
DIRECTOR, YESHIVA KETANA

YESHIVAS OHR REUVEN
The Lupin Campus
259 Grandview Avenue
Suffern, NY 10901
P. 845.362.8362
F. 845.352.9593
Mail@ohrreuven.com
Ohrreuven.com

March 19, 2025

Proposed Improvements Narrative:

Yeshivas Ohr Reuven's (YOR) mission is to provide an enriching Hebrew and General Studies education within a positive, nurturing environment. Our goal is to develop in our students a sense of respect, a heightened sense of self-esteem, and a clear sense of individual and collective responsibility to America, the Jewish community and Israel. Our curriculum is designed to ensure that our students will grow up to lead meaningful, happy and productive lives.

Yeshivas Ohr Reuven, is a religious Orthodox Jewish institution, with approximately 300 K-8 students and approximately 85 high school (9-12) students. Most of our students are day students, but some high school students live on site in our dormitory building. Yeshivas Ohr Reuven employs both full- time and part- time faculty and staff members. Three daily prayer services are held on site, and dormitory students spend every day on-site, including weekends.

The proposed faculty housing and dormitory expansion will primarily benefit the high school. Our high school program begins with morning prayers at 7:40am, and concludes with evening prayers at 8:45pm every weekday. During that time, the students are taught both Jewish and general studies. Jewish studies include, but are not limited to; Bible study, Talmud, Jewish Law, and Jewish History. General Studies include, but are not limited to; Global History, U.S. History & Government, Algebra, Geometry, Trigonometry, Calculus, Biology, Chemistry, Physics, Public Speech, English Language Arts, and Computer Science.

Our focus is to provide necessary resources to each student as it becomes necessary. As such, we offer after school programs and resources in which faculty mentor students after classes have ended. Our Faculty rotates throughout the day, meaning, that some faculty will end at 1:00pm, others at 3:00 and still others at 6:15pm, depending on what subject they are teaching daily. This makes it necessary for the faculty to return to the campus after they have finished their day, to offer the resources to these students.

Our proposal for on-site faculty housing will not only allow us to provide more resources to the students, but will have a positive impact on the faculty and community by providing a short term living space on campus. Less vehicular traffic, congestion, parking, and noise and environmental pollution, are all benefits of this proposal.

The proposed housing would be for faculty and their families. The proposed housing is not designed for long term living, but rather for our faculty (in many cases our own alumni), to begin their lives, remaining productive within the school that has

OHR REUVEN אור ראובן

Harav Bezalel Rudinsky
ROSH HAYESHIVA

Harav Benzion Brodie
S'GAN ROSH HAYESHIVA

LIMUDEI KODESH

Rabbi Ari Medetsky
MENAHEL, MESIVTA

Rabbi Yosef B. Rawicki
MENAHEL, YESHIVA KETANA

Rabbi Y. Bentzion Bamberger
MASHGIACH

Rabbi Raphael Vilinsky
S'GAN MENAHEL, MESIVTA

GENERAL STUDIES

Mr. Boruch Rudinsky
PRINCIPAL, MESIVTA

Rabbi Yisroel Gottlieb
PRINCIPAL, YESHIVA KETANA
ASSOCIATE PRINCIPAL, MESIVTA

Rabbi Zev Fuchs
ASSISTANT PRINCIPAL, MESIVTA

EXECUTIVE DIRECTOR

Dovid Yoseph Berman

PRESCHOOL

Mrs. Feige Bessler
PRESCHOOL CONSULTANT

SPECIAL SERVICES

Mrs. Rachel Levinger
DIRECTOR, YESHIVA KETANA

nurtured them - in some cases from kindergarten – and to give back to the next generation of students.

We expect that a faculty member would spend two to three years in residence before moving to more permanent housing off-site.

Normal growth as an institution makes it necessary to provide safe and sustainable parking areas for our faculty, parents, and visitors. This proposal includes additional parking areas as outlined on our application. We are currently at capacity on our parking and have begun to utilize the overflow parking areas on our campus. Additionally, the new parking proposal makes it possible for emergency vehicles to move through the campus more easily. The proposal includes resurfacing of the existing paving as well, a much needed improvement.

In addition, our proposal askes for a small dormitory expansion as outlined on the application. This too, will allow our students a bit more room (2 student lounges are included on the design) allowing for a more productive environment. Specialists in several fields were consulted to assist with the design elements to ensure the most comfortable and creative environment, while adding safety features to the dormitory that have become necessary since its original construction 18 years ago. The exterior fascia will be updated as well giving the campus a much needed facelift.

Taking into consideration the benefit achieved from after school resources and the availability of 24 hours, 7 days a week faculty access by our students, greater supervision for our students by faculty who are familiar to them, and the greater safety and security gained from having our faculty on campus 24 hours, 7 days a week, we feel strongly that this proposal has the ability to add considerably to our already privileged programming.

David J. Berman
Executive Director
Yeshivas Ohr Reuven

YESHIVAS OHR REUVEN
The Lupin Campus
259 Grandview Avenue
Suffern, NY 10901
P. 845.362.8362
F. 845.352.9593
Mail@ohrreuven.com
Ohrreuven.com

PART I

Name of Municipality VILLAGE OF WESLEY HILLS Date _____

Please check all that apply:

✔ Planning Board	____ Municipal Board
____ Zoning Board of Appeals* *(Fill out* **Part II** *of this form.)*	____ Historical Board
	____ Architectural Board
____ Subdivision	____ Pre-preliminary/Sketch
____ Number of Lots	✔ Preliminary
✔ Site Plan	✔ Final
✔ Special Permit	____ Conditional Use
____ Zoning Code Amendment	____ Zone Change
____ Variance	

Applicant: Yeshivas Ohr Reuven **Phone #** 845-352-7100 x112

Address: 259 Grandview Road, Suffern, NY 10901

Street Name & Number (Post Office)

Project Name: Yeshivas Ohr Reuven - Amended Site Plan

Tax Map Lot No. 40.16 - 1 - 17 and 18 Map Date February 2021

- - Current Zoning R-50

Location: On the West side of Spook Rock Road (Rte 85), 0 feet North of Grandview Avenue (Rte 80) in the town of Ramapo ~~hamlet~~/village of Wesley Hills.

Acreage of Parcel 13.047 **Zoning District** R-50

School District East Ramapo School District **Postal District** Suffern

Fire District Tallman Fire Dept **Ambulance District** Ramapo Valley

Water District Suez **Sewer District** RCSD#1

Project Description: *(If additional space required, please attach a narrative summary.)*

Expand current campus to include additional parking, on-site faculty housing, and an addition to existing student dormitory

If **subdivision**:

1) Is any variance from the subdivision regulations required?_____
2) Is any open space being offered? ____ If so, what amount? _____
3) Is this a standard or average density subdivision?_____

If **site plan**:

1) Total size of building(s) in square feet 20, 979 sf footprint
2) Proposed addition 16092 sf footprint
3) Number of dwelling units 24 townhouses & 54 dormitory beds

If **special permit**, list special permit use and what the property will be used for.

amendment to Resolution #08-29 - number of students permitted on site

Are there **slopes greater than 25**%? If yes, please indicate the amount and show the gross and net area. 0.5885ac; 13.047ac gross; 12.3181ac net (net reflects other features)

Are there **streams** on the site? If yes, please provide the names. no

Are there **wetlands** on the site? If yes, please provide the names and type. no

Project History: Has this project ever been reviewed before? yes

If so, provide a narrative, including the list case number, name, date, and the board you appeared before. See attached

List tax map section, block & lot numbers for all other abutting properties in the same ownership as this project.

41.13-2-3; 40.16-1-19

Property Owner: Yeshivas Ohr Reuven Phone # 845-352-7100 x112

Address 259 Grandview Road, Suffern, NY 10901

Street Name & Number (Post Office) State Zip code

Engineer/Architect/Surveyor: Sparaco & Youngblood, PLLC Phone # 845-782-8543

Address 18 North Main Street, PO Box 818, Harriman, NY 10926

Street Name & Number (Post Office) State Zip code

Attorney: Emanuel Law P.C. Phone # 845-634-4141

Address 4 Laurel Road, New City, NY 10956

Street Name & Number (Post Office) State Zip code

Contact Person: Ira M. Emanuel, Esq. Phone # 845-634-4141

Address 4 Laurel Road, New City, NY 10956

Street Name & Number (Post Office) State Zip code

YESHIVA OHR REUVEN

PROJECT APPROVAL HISTORY

Case No.	Approval Date	Board	Summary of Approval
94-22	9/8/1994	Planning	Special Permit for School
94-23	9/8/1994	Planning	Site Plan for School
___	6/20/2000	ZBA	Variances for side setback and height
00-17	6/28/2000	Planning	Amended Special Permit (dormitory)
00-18	6/28/2000	Planning	Revised Site Plan (dormitory)
08-29	12/3/2008	Planning	Amended Special Permit (number of students)
09-6	2/25/2009	Planning	Revised Site Plan (lighting)

VILLAGE OF WESLEY HILLS
432 Route 306
Wesley Hills, New York 10952
(845) 354-0400 Fax: (845) 354-4097

AFFIDAVIT OF OWNERSHIP

STATE OF NEW YORK}
COUNTY OF ROCKLAND } SS:
VILLAGE OF WESLEY HILLS }

David J. Berman being duly sworn, deposes and says that he/she resides at

in the County of Rockland, State of New York; that he/she is the owner in fee of all that certain lot, piece or parcel of land situated, lying and being in the Village of Wesley Hills, and designated on the Town of Ramapo Map as Section No. 40.16 Block No. 1 Lot No. 17 and 18 and that he/she hereby authorizes the attached application to be submitted in his/her behalf and that the statements of fact contained in said application are true.

The applicant is the (owner) (contract vendee) of the said property.

PLEASE SIGN HERE

Owner: David J. Berman EX. DIRECTOR ON BEHALF OF YESHIVA OHR REUVEN

Address: 259 Grandview Road, Suffern, NY 10901

Sworn to before me this

20th day of March 2025

E. Ziet

Notary Public

ELIZABETH ZIET
Notary Public, State of New York
Reg. No. 01ZI6388352
Qualified in Rockland County
Commission Expires 03/04/2027

This property is within **500 feet** of:
(Check all that apply)

IF ANY ITEM IS CHECKED, A REVIEW MUST BE DONE BY THE ROCKLAND COUNTY COMMISSIONER OF PLANNING UNDER THE STATE GENERAL MUNICIPAL LAW, SECTIONS 239 K, L, M, AND N.

✔ State or County Road
County/State Land or Right-of-Way
✔ Municipal Boundary
State or County Park
✔ County Stream
County Facility

List name(s) of facility checked above.
RC Rte 80 (Grandview Ave), RC Rte 85 (Spook Rock Rd.), RC Rte 80A, Village of Montebello, Willow Tree Brook

Location of Parcel(s)
257-259 Grandview Ave, Wesley Hills, NY

Referral Agencies: ***(Please check with the Village Office*** *to make sure that the appropriate agencies, as needed, receive copies of your* ***application and plans*** *for their review.)*

✔ RC Highway Department
✔ RC Drainage Agency
RC Soil and Water Cons. Dist.
NYS Dept. of Transportation
✔ RC Sewer District #1
✔ Rockland County 911
✔ Town of Ramapo Dept. of Public Works
✔ RC Dept. of Planning
✔ RC Dept. of Environmental Health
✔ NYS Dept. of Environmental Conservation
Town of Ramapo Building Dept.

Adjacent Municipality Village of Montebello

(AS APPLICABLE)

TO ALL APPLICANTS - YOU MUST SEND A COPY OF APPLICATIONS AND PLANS TO:

Regional Manager
Orange and Rockland
75 West Route 59
Spring Valley, NY 10977

I have informed the above checked agencies and Orange and Rockland on _____.

Signature

Date

APPLICATION REVIEW FORM

Applicant's Signature and Certification

State of New York)
County of Rockland) SS.:
Town/Village of Wesley Hills)

I, David J. Berman, hereby depose and say that all the above statements contained in the papers submitted herewith are true.

PLEASE SIGN HERE

Mailing Address 259 Grandview Road, Suffern, NY 10901

SWORN to before this
20th day of March, 20 25

E. Ziet
Notary Public

ELIZABETH ZIET
Notary Public, State of New York
Reg. No. 01ZI6388352
Qualified in Rockland County
Commission Expires 03/04/2027

Owner/Applicant's Consent Form to Visit Property

I, David J. Berman, Executive Director of the, owner/applicant of the property described in application submitted to the town/village board, planning board, zoning board of appeals, and/or supporting staff, do hereby give permission to members of said boards and/or supporting staff to visit the property in question for the purposes incidental to the within application at a reasonable time during the day and upon reasonable notice to the owner or tenant in possession.

PLEASE SIGN HERE

Owner/Applicant

SWORN to before this
20th day of March, 20 25

E. Ziet
Notary Public

ELIZABETH ZIET
Notary Public, State of New Yor
Reg. No. 01ZI6388352
Qualified in Rockland Coun
Commission Expires 03/04 2027

APPLICATION REVIEW FORM

Affidavit of Ownership/Owner's Consent

State of New York)
County of Rockland) SS.:
Town/Village of Wesley Hills)

I, David J. Berman being duly sworn, hereby depose and say that I reside at: _____

in the county of _____ in the state of _____.

I am the (* Executive Director of the) owner in fee simple of premises located at: 257-259 Grandview Ave, Wesley Hills, NY

described in a certain deed of said premises recorded in the Rockland County Clerk's Office in Liber 00592 of conveyances, page 01084 .

Said premises have been in my/its possession since February 1993 . Said premises are also known and designated on the Town of Ramapo

Tax Map Lot – No. 40.16 - 1 - 17 and 18 Map Date February 2021

Current Zoning R-50

I hereby authorize the within application on my behalf, and that the statements of fact contained in said application are true, and agree to be bound by the determination of the board. Also, I do hereby give permission to the Village of Wesley Hills, its agents, servants and employees to enter upon the above described property solely for the purposes incidental to the within application at reasonable times upon reasonable notice to the owner or tenant in possession.

Owner PLEASE SIGN HERE David J. Berman

Mailing Address 259 Grandview Road, Suffern, NY 10901

SWORN to before this

20th day of March, 20 25

C. Ziet

Notary Public

ELIZABETH ZIET
Notary Public, State of New York
Reg. No. 01ZI6388352
Qualified in Rockland County
Commission Expires 03/04/2027

* *If owner is a corporation, fill in the office held by deponent and name of corporation, and provide a list of all directors, officers and stockholders owning more than 5% of any class of stock.*

APPLICATION REVIEW FORM
Affidavit Pursuant to Section 809 of the General Municipal Law

State of New York)
County of Rockland) SS.:
Town/Village of Wesley Hills)

I, David J. Berman, being duly sworn, hereby depose and say that all the following statements and the statements contained in the papers submitted herewith are true and that the nature and extent of any interests set forth are disclosed to the extent that they are known to the applicant.

1. Print or type full name and post office address

Yeshivas Ohr Reuven

259 Grandview Road, Suffern, NY 10901

certifies that he is owner or agent of all that certain lot, piece or parcel of land and/or building described in this application **and if not the owner that he has been duly and properly authorized to make this application and to assume responsibility for the owner** in connection with this application for the relief below set forth:

2. To the Planning Board of the Town/Village of
(Board, Commission or Agency)
Wesley Hills, Rockland County, New York:

Application, petition or request is hereby submitted for:

( ) Variance or modification from the requirement of Section _____;
( ) Special permit per the requirements of Section _____;
( ) Review and approval of proposed subdivision plat;
( ) Exemption from a plat or official map;
( ) An order to issue a certificate, permit or license;
( ) An amendment to the Zoning Ordinance or Official Map or change thereof;
(✓) Other (*explain*) _____;
amendment to existing Special Permit (Resolution #08-29); amendment to site plan

To permit construction, maintenance and use of
Expand current campus to include additional parking, on-site faculty housing, and an addition to existing student dormitory

3. Premises affected are in a R-50 zone and from the town of Ramapo tax map, the property is know as:

Tax Map Lot – No. 40.16 - 1 - 17 and 18

APPLICATION REVIEW FORM

4. There is no state officer, Rockland County Officer or employee or town/village officer or employee nor his or her spouse, brother, sister, parent, child or grandchild, or a spouse of any of these relatives who is the applicant or who has an interest in the person, partnership or association making this application, petition or request, or is an officer, director, partner or employee of the applicant, or that such officer or employee, if this applicant is a corporation, legally or beneficially owns or controls any stock of the applicant in excess of 5% of the total of the corporation if its stock is listed on the New York or American Stock Exchanges; or is a member or partner of the applicant, if the applicant is an association or a partnership; nor that such town/village officer or employee nor any member of his family in any of the foregoing classes is a party to an agreement with the applicant, express or implied, whereby such officer or employee may receive any payment or other benefit, whether or not for service rendered, which is dependent or contingent upon the favorable approval of this application, petition or request.

5. That to the extent that the same is known to your applicant, and to the owner of the subject premises **there is disclosed herewith** the interest of the following officer or employee of the State of New York or the County of Rockland or of the ~~Town~~/Village of Wesley Hills in the petition, request or application or in the property or subject matter to which it relates:

(if none, so state)

a. Name and address of officer or employee _____
None

b. Nature of interest _____

c. If stockholder, number of shares _____

d. If officer or partner, nature of office and name of partnership _____

e. If a spouse or brother, sister, parent, child, grandchild or the spouse of any of these blood relatives of such state, county or town/village officer or employee, state name and address of such relative and nature of relationship to officer and employee and nature and extent of office, interest or participation or association having an interest in such ownership or in any business entity sharing in such ownership. _____

f. In the event of corporate ownership: A list of all directors, officers and stockholders of each corporation owning more than five (5%) percent of any class of stock, must be attached, if any of these are officers or employees of the State of New York, or of the County of Rockland, or of the ~~Town~~/Village of Wesley Hills.

I, David J. Berman, do hereby depose and say that all the above statements and statements contained in the papers submitted herewith are true, knowing that a person who knowingly and intentionally violates this section is guilty of a misdemeanor.

PLEASE SIGN HERE

David J. Berman

Mailing Address 259 Grandview Road, Suffern, NY 10901

SWORN to before this

20th day of March, 20 25

APPLICATION REVIEW FORM

E. Ziet

Notary Public

ELIZABETH ZIET
Notary Public, State of New York
Reg. No. 01ZI6388352
Qualified in Rockland County
Commission Expires 03/04/2027

APPLICATION REVIEW FORM

DISCLAIMER

APPLICANT TAKES FULL RESPONSIBILITY FOR RESEARCHING THE TAX MAP FOR THE LIST OF NAMES OF PROPERTY OWNERS ON THE ENCLOSED ***AFFIDAVIT OF MAILING LIST***, AND SUPPLYING THE NECESSARY AMOUNT OF SELF-ADDRESSED STAMPED ENVELOPES.

THE APPLICANT'S ENVELOPES MUST COINCIDE WITH THE LIST. THE CLERK'S RESPONSIBILITY IS LIMITED TO CHECKING NAMES ON THE ENVELOPES AGAINST THE AFOREMENTIONED AFFIDAVIT BEFORE MAILING THEM.

RECEIPT OF THIS DISCLAIMER IS ACKNOWLEDGED

PLEASE SIGN HERE

David J. Bowman

APPLICANT

DATED

APPLICATION REVIEW FORM

AFFIDAVIT

State of New York)
County of Rockland) SS.:
Town/Village of Wesley Hills)

I, David J. Berman being duly sworn deposes and says that he is the applicant, agent or attorney for applicant, in the matter of the petition before the Planning Board *(board)* in the town/village of Wesley Hills affecting property located at 259 Grandview Road, Wesley Hills, NY, Rockland County, New York.

That the following are all of the owners of property 500 **feet** *(distance)* from the premises as to which this application is being taken.

SECTION/BLOCK/LOT	NAME	ADDRESS
See attached list		

SWORN to before this

26th day of March, 20 25

E. Ziet
Notary Public

PLEASE SIGN HERE

David J. Berman

ELIZABETH ZIET
Notary Public, State of New York
Reg. No. 01ZI6388352
Qualified in Rockland County
Commission Expires 03/04/2027

APPLICATION REVIEW FORM

VILLAGE OF WESLEY HILLS
432 Route 306
Wesley Hills, New York 10952
(845) 354-0400 Fax: (845) 354-4097

AFFIDAVIT OF POSTING

STATE OF NEW YORK}
COUNTY OF ROCKLAND } SS:
VILLAGE OF WESLEY HILLS }

David J. Berman being duly sworn, deposes and says that he/she is the applicant in the matter of an application before the Village of Wesley Hills Planning Board affecting property located at 259 Grandview Ave, Wesley Hills, Town of Ramapo, Rockland County, New York.

That on the_____day of _____20__, he/she posted the posters provided by the Planning Board of the Village of Wesley Hills giving notice of the hearing on this application in a conspicuous place visible from every street along the frontage of the plot affected by this application.

David J. Berman
Signature of Applicant

Sworn to before me this
20th day of March 2025

E. Ziet
Notary Public

ELIZABETH ZIET
Notary Public, State of New York
Reg. No. 01ZI6388352
Qualified in Rockland County
Commission Expires 03/04/2027

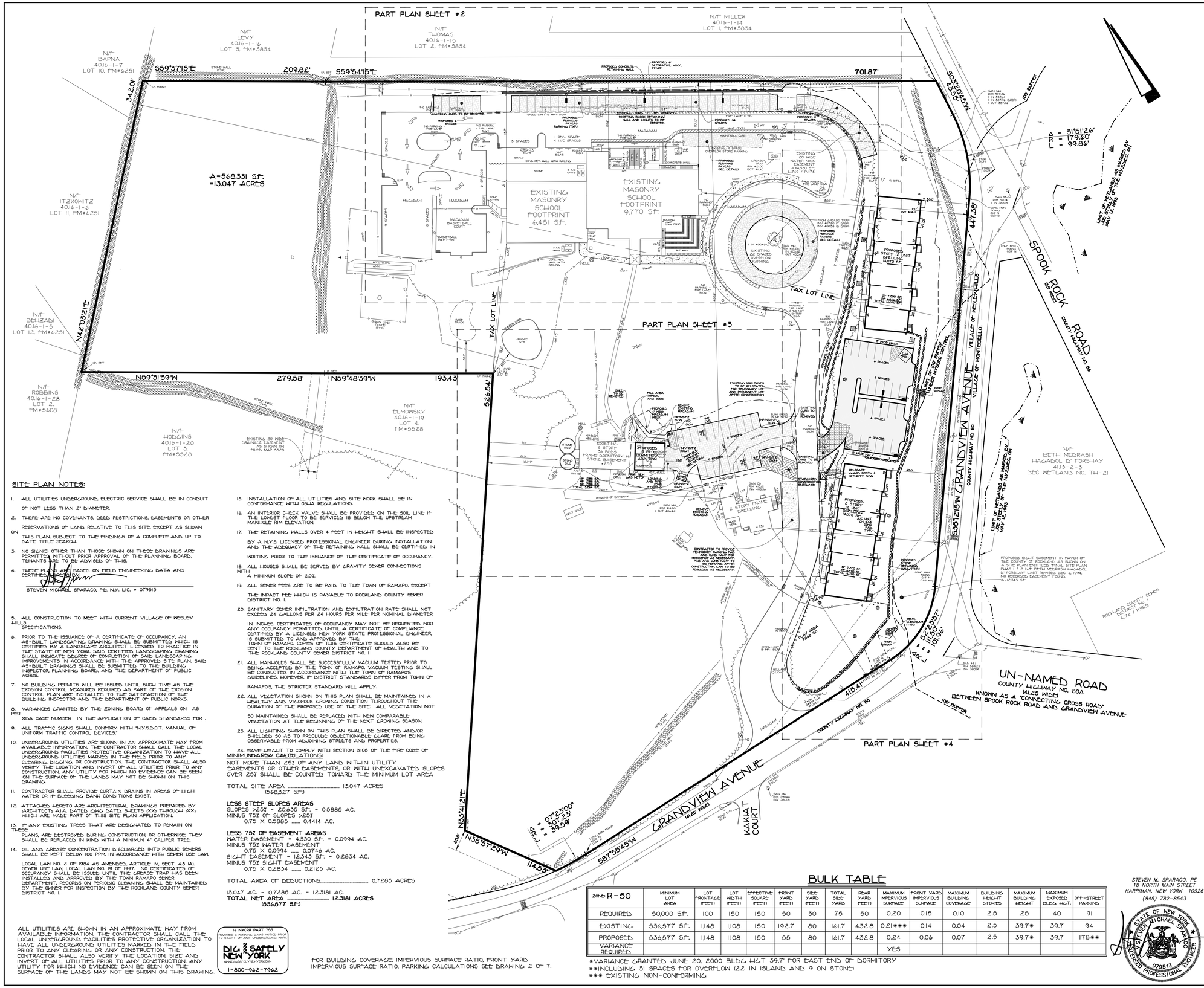

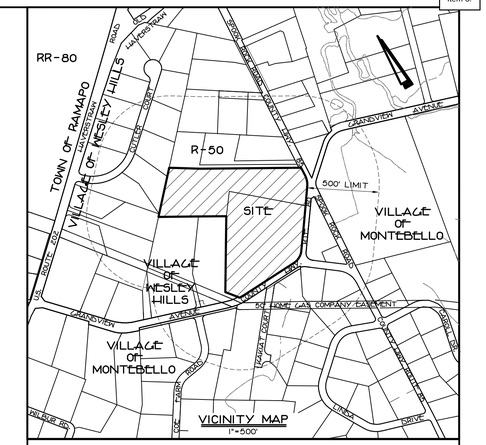

NOTES :

1. THIS IS A SITE PLAN OF LOTS 17 & 18, BLOCK 1, SECTION 40.16 AS SHOWN ON THE VILLAGE OF WESLEY HILLS TAX MAP.
2. AREA OF TRACT: =568,331 S.F. =13.0470 AC.
3. ZONE: R-50
4. EXISTING & PROPOSED USE: SCHOOL, DORMITORY & STAFF HOUSING.
5. RECORD OWNER: YESHIVAS OHR REUVEN 259 GRANDVIEW AVE SUFFERN, NEW YORK 10901
6. RECORD APPLICANT: YESHIVAS OHR REUVEN 259 GRANDVIEW AVE SUFFERN, NEW YORK 10901
7. FIRE DISTRICT: TALLMAN
8. SCHOOL DISTRICT: EAST RAMAPO CENTRAL SCHOOL DISTRICT
9. WATER DISTRICT: VEOLIA WATER NEW YORK
10. SEWER DISTRICT: BENEFITTED AREA #5
11. DATUM: USGS
12. THE UNDERSIGNED, OWNER AND/OR APPLICANT, AS A CONDITION OF APPROVAL OF THIS SITE PLAN, HEREBY AGREES TO COMPLETE THE WITHIN SITE DEVELOPMENT PLAN AS DRAWN AND ALL IMPROVEMENTS SHOWN THEREON. THE APPLICANT/OWNER IS AWARE THAT NO CHANGES IN THIS PLAN MAY BE MADE UNLESS APPROVED BY THE PLANNING BOARD.

APPLICANT DATE

OWNER DATE

SITE PLAN NOTES:

1. ALL UTILITIES UNDERGROUND. ELECTRIC SERVICE SHALL BE IN CONDUIT OF NOT LESS THAN 2" DIAMETER.
2. THERE ARE NO COVENANTS, DEED RESTRICTIONS, EASEMENTS OR OTHER RESERVATIONS OF LAND RELATIVE TO THIS SITE EXCEPT AS SHOWN ON THIS PLAN, SUBJECT TO THE FINDINGS OF A COMPLETE AND UP TO DATE TITLE SEARCH.
3. NO SIGNS OTHER THAN THOSE SHOWN ON THESE DRAWINGS ARE PERMITTED WITHOUT PRIOR APPROVAL OF THE PLANNING BOARD. TENANTS ARE TO BE ADVISED OF THIS.
4. THESE PLANS ARE BASED ON FIELD ENGINEERING DATA AND CERTIFIED HERE BY:

STEVEN MICHAEL SPARACO, P.E. N.Y. LIC. # 079513

5. ALL CONSTRUCTION TO MEET WITH CURRENT VILLAGE OF WESLEY HILLS SPECIFICATIONS.
6. PRIOR TO THE ISSUANCE OF A CERTIFICATE OF OCCUPANCY, AN AS-BUILT LANDSCAPING DRAWING SHALL BE SUBMITTED WHICH IS CERTIFIED BY A LANDSCAPE ARCHITECT LICENSED TO PRACTICE IN THE STATE OF NEW YORK. SAID CERTIFIED LANDSCAPING DRAWING SHALL INDICATE DEGREE OF COMPLETION OF SAID LANDSCAPING IMPROVEMENTS IN ACCORDANCE WITH THE APPROVED SITE PLAN. SAID AS-BUILT DRAWINGS SHALL BE SUBMITTED TO THE BUILDING INSPECTOR, PLANNING BOARD, AND THE DEPARTMENT OF PUBLIC WORKS.
7. NO BUILDING PERMITS WILL BE ISSUED UNTIL SUCH TIME AS THE EROSION CONTROL MEASURES REQUIRED AS PART OF THE EROSION CONTROL PLAN ARE INSTALLED TO THE SATISFACTION OF THE BUILDING INSPECTOR AND THE DEPARTMENT OF PUBLIC WORKS.
8. VARIANCES GRANTED BY THE ZONING BOARD OF APPEALS ON AS PER XBA CASE NUMBER IN THE APPLICATION OF CADD STANDARDS FOR .
9. ALL TRAFFIC SIGNS SHALL CONFORM WITH "N.Y.S.D.O.T. MANUAL OF UNIFORM TRAFFIC CONTROL DEVICES."
10. UNDERGROUND UTILITIES ARE SHOWN IN AN APPROXIMATE WAY FROM AVAILABLE INFORMATION. THE CONTRACTOR SHALL CALL THE LOCAL UNDERGROUND FACILITIES PROTECTIVE ORGANIZATION TO HAVE ALL UNDERGROUND UTILITIES MARKED IN THE FIELD PRIOR TO ANY CLEARING, DIGGING OR CONSTRUCTION. THE CONTRACTOR SHALL ALSO VERIFY THE LOCATION AND INVERT OF ALL UTILITIES PRIOR TO ANY CONSTRUCTION. ANY UTILITY FOR WHICH NO EVIDENCE CAN BE SEEN ON THE SURFACE OF THE LANDS MAY NOT BE SHOWN ON THIS DRAWING.
11. CONTRACTOR SHALL PROVIDE CURTAIN DRAINS IN AREAS OF HIGH WATER OR IF BLEEDING BANK CONDITIONS EXIST.
12. ATTACHED HERETO ARE ARCHITECTURAL DRAWINGS PREPARED BY ARCHITECT; A.I.A. DATED (DW) DATE; SHEETS (XX) THROUGH (XX), WHICH ARE MADE PART OF THIS SITE PLAN APPLICATION.
13. IF ANY EXISTING TREES THAT ARE DESIGNATED TO REMAIN ON THESE PLANS ARE DESTROYED DURING CONSTRUCTION OR OTHERWISE, THEY SHALL BE REPLACED IN KIND WITH A MINIMUM 4" CALIPER TREE.
14. OIL AND GREASE CONCENTRATION DISCHARGED INTO PUBLIC SEWERS SHALL BE KEPT BELOW 100 PPM, IN ACCORDANCE WITH SEWER USE LAW.

   LOCAL LAW NO. 2 OF 1984 AS AMENDED, ARTICLE IV, SECT. 4.3 (A) SEWER USE LAW, LOCAL LAW NO. 19 OF 1997. NO CERTIFICATES OF OCCUPANCY SHALL BE ISSUED UNTIL THE GREASE TRAP HAS BEEN INSTALLED AND APPROVED BY THE TOWN RAMAPO SEWER DEPARTMENT. RECORDS ON PERIODIC CLEANING SHALL BE MAINTAINED BY THE OWNER FOR INSPECTION BY THE ROCKLAND COUNTY SEWER DISTRICT NO. 1.
15. INSTALLATION OF ALL UTILITIES AND SITE WORK SHALL BE IN CONFORMANCE WITH OSHA REGULATIONS.
16. AN INTERIOR CHECK VALVE SHALL BE PROVIDED ON THE SOIL LINE IF THE LOWEST FLOOR TO BE SERVICED IS BELOW THE UPSTREAM MANHOLE RIM ELEVATION.
17. THE RETAINING WALLS OVER 4 FEET IN HEIGHT SHALL BE INSPECTED BY A N.Y.S. LICENSED PROFESSIONAL ENGINEER DURING INSTALLATION AND THE ADEQUACY OF THE RETAINING WALL SHALL BE CERTIFIED IN WRITING PRIOR TO THE ISSUANCE OF THE CERTIFICATE OF OCCUPANCY.
18. ALL HOUSES SHALL BE SERVED BY GRAVITY SEWER CONNECTIONS WITH A MINIMUM SLOPE OF 2.0%
19. ALL SEWER FEES ARE TO BE PAID TO THE TOWN OF RAMAPO, EXCEPT THE IMPACT FEE WHICH IS PAYABLE TO ROCKLAND COUNTY SEWER DISTRICT NO. 1.
20. SANITARY SEWER INFILTRATION AND EXFILTRATION RATE SHALL NOT EXCEED 24 GALLONS PER 24 HOURS PER MILE PER NOMINAL DIAMETER IN INCHES. CERTIFICATES OF OCCUPANCY MAY NOT BE REQUESTED NOR ANY OCCUPANCY PERMITTED, UNTIL A CERTIFICATE OF COMPLIANCE, CERTIFIED BY A LICENSED NEW YORK STATE PROFESSIONAL ENGINEER, IS SUBMITTED TO AND APPROVED BY THE TOWN OF RAMAPO. COPIES OF THIS CERTIFICATE SHOULD ALSO BE SENT TO THE ROCKLAND COUNTY DEPARTMENT OF HEALTH AND TO THE ROCKLAND COUNTY SEWER DISTRICT NO. 1
21. ALL MANHOLES SHALL BE SUCCESSFULLY VACUUM TESTED PRIOR TO BEING ACCEPTED BY THE TOWN OF RAMAPO. VACUUM TESTING SHALL BE CONDUCTED IN ACCORDANCE WITH THE TOWN OF RAMAPO'S GUIDELINES. HOWEVER, IF DISTRICT STANDARDS DIFFER FROM TOWN OF RAMAPO'S, THE STRICTER STANDARD WILL APPLY.
22. ALL VEGETATION SHOWN ON THIS PLAN SHALL BE MAINTAINED IN A HEALTHY AND VIGOROUS GROWING CONDITION THROUGHOUT THE DURATION OF THE PROPOSED USE OF THE SITE. ALL VEGETATION NOT SO MAINTAINED SHALL BE REPLACED WITH NEW COMPARABLE VEGETATION AT THE BEGINNING OF THE NEXT GROWING SEASON.
23. ALL LIGHTING SHOWN ON THIS PLAN SHALL BE DIRECTED AND/OR SHIELDED SO AS TO PRECLUDE OBJECTIONABLE GLARE FROM BEING OBSERVABLE FROM ADJOINING STREETS AND PROPERTIES.
24. EAVE HEIGHT TO COMPLY WITH SECTION D105 OF THE FIRE CODE OF

MINIMUM YARD AREA CALCULATIONS:
NOT MORE THAN 25% OF ANY LAND WITHIN UTILITY EASEMENTS OR OTHER EASEMENTS, OR WITH UNEXCAVATED SLOPES OVER 25% SHALL BE COUNTED TOWARD THE MINIMUM LOT AREA

TOTAL SITE AREA ..... 13.047 ACRES
(568,527 S.F.)

LESS STEEP SLOPES AREAS
SLOPES >25% = 25,635 S.F. = 0.5885 AC.
MINUS 75% OF SLOPES >25%
0.75 X 0.5885 ..... 0.4414 AC.

LESS 75% OF EASEMENT AREAS
WATER EASEMENT = 4,330 S.F. = 0.0994 AC.
MINUS 75% WATER EASEMENT
0.75 X 0.0994 ..... 0.0746 AC.
SIGHT EASEMENT = 12,345 S.F. = 0.2834 AC.
MINUS 75% SIGHT EASEMENT
0.75 X 0.2834 ..... 0.2125 AC.

TOTAL AREA OF DEDUCTIONS..... 0.7285 ACRES

13.047 AC. - 0.7285 AC. = 12.3181 AC.
TOTAL NET AREA ..... 12.3181 ACRES
(536,577 S.F.)

ALL UTILITIES ARE SHOWN IN AN APPROXIMATE WAY FROM AVAILABLE INFORMATION. THE CONTRACTOR SHALL CALL THE LOCAL UNDERGROUND FACILITIES PROTECTIVE ORGANIZATION TO HAVE ALL UNDERGROUND UTILITIES MARKED IN THE FIELD PRIOR TO ANY CLEARING OR ANY CONSTRUCTION. THE CONTRACTOR SHALL ALSO VERIFY THE LOCATION, SIZE AND INVERT OF ALL UTILITIES PRIOR TO ANY CONSTRUCTION. ANY UTILITY FOR WHICH NO EVIDENCE CAN BE SEEN ON THE SURFACE OF THE LANDS MAY NOT BE SHOWN ON THIS DRAWING.

16 NYCRR PART 753
REQUIRES 2 WORKING DAYS NOTICE PRIOR TO START OF ANY UNDERGROUND WORK
DIG SAFELY NEW YORK
WWW.DIGSAFELYNEWYORK.COM
1-800-962-7962

FOR BUILDING COVERAGE, IMPERVIOUS SURFACE RATIO, FRONT YARD IMPERVIOUS SURFACE RATIO, PARKING CALCULATIONS SEE DRAWING 2 OF 7.

BULK TABLE

ZONE: R-50	MINIMUM LOT AREA	LOT FRONTAGE (FEET)	LOT WIDTH (FEET)	EFFECTIVE SQUARE (FEET)	FRONT YARD (FEET)	SIDE YARD (FEET)	TOTAL SIDE YARD	REAR YARD (FEET)	MAXIMUM IMPERVIOUS SURFACE	FRONT YARD IMPERVIOUS SURFACE	MAXIMUM BUILDING COVERAGE	BUILDING HEIGHT STORIES	MAXIMUM BUILDING HEIGHT	MAXIMUM EXPOSED BLDG. HGT.	OFF-STREET PARKING
REQUIRED	50,000 S.F.	100	150	150	50	30	75	50	0.20	0.15	0.10	2.5	25	40	91
EXISTING	536,577 S.F.	1,148	1,108	150	192.7	80	161.7	432.8	0.21***	0.14	0.04	2.5	39.7*	39.7	94
PROPOSED	536,577 S.F.	1,148	1,108	150	55	80	161.7	432.8	0.24	0.06	0.07	2.5	39.7*	39.7	178**
VARIANCE REQUIRED									YES						

*VARIANCE GRANTED JUNE 20, 2000 BLDG HGT 39.7' FOR EAST END OF DORMITORY
**INCLUDING 31 SPACES FOR OVERFLOW (22 IN ISLAND AND 9 ON STONE)
*** EXISTING NON-CONFORMING

REVISIONS

1. REV: UPDATED BULK TABLES-10/16/23
2. REV: WALK OUT BASEMENTS, GRADING DRAINAGE WALLS-1/9/25

APPROVED BY RESOLUTION OF THE PLANNING BOARD OF THE XXX, N.Y. ON THE DAY OF 20 SUBJECT TO ALL REQUIREMENTS AND CONDITIONS OF SAID RESOLUTION. ANY CHANGE, ERASURE, MODIFICATION OR REVISION OF THIS PLAT AS APPROVED SHALL VOID THIS APPROVAL.
SIGNED THIS DAY OF 20 .

CHAIRMAN

CLERK

OVERALL SITE PLAN
FOR
YESHIVAS OHR REUVEN
LOCATED IN
VILLAGE OF WESLEY HILLS
TOWN OF RAMAPO
ROCKLAND COUNTY, NEW YORK

GRAPHIC SCALE
20 10 0 20 40 60

STEVEN M. SPARACO, PE
18 NORTH MAIN STREET
HARRIMAN, NEW YORK 10926
(845) 782-8543

STATE OF NEW YORK · STEVEN MICHAEL SPARACO · 079513 · LICENSED PROFESSIONAL ENGINEER

SPARACO & YOUNGBLOOD, PLLC
CIVIL ENGINEERING * LAND SURVEYING
SITE PLANNING
18 NORTH MAIN STREET
P.O. BOX 818
HARRIMAN, N.Y. 10926
TEL: (845) 782-8543
FAX: (845) 782-5901
SPARACO.STEVE@SELSNY.COM * WDYLS1@GMAIL.COM

FILE #	SP-4601
DATE	JUNE 3, 2021
SCALE	1" = 50'
DWG #	1 OF 8

SP-4601

GENERAL NOTES:

1. CONTRACTOR TO VERIFY LOCATION, SIZE AND INVERTS OF ALL EXISTING UTILITIES PRIOR TO CONSTRUCTION.

2. CONTRACTOR SHALL CONTACT ALL UTILITY COMPANIES AND HAVE ALL UTILITIES FIELD LOCATED BY RESPECTIVE UTILITY COMPANY AND SHALL ASSUME FULL RESPONSIBILITY AND SHALL BE SOLELY RESPONSIBLE FOR MAINTAINING CONTINUOUS UTILITY SERVICE AND REPAIRS TO ANY DAMAGE.

3. ALL EXISTING OFF-SITE PAVEMENT, FENCES, CURBS, WALKS AND OTHER FACILITIES DISTURBED BY CONSTRUCTION SHALL BE RESTORED OR REPLACED BY THE CONTRACTOR AT NO ADDITIONAL COST.

4. EXISTING UTILITIES & STRUCTURES THAT ARE TO BE REMOVED AND/OR REPLACED SHALL BE REMOVED AND LEGALLY DISPOSED OF BY THE CONTRACTOR.

5. PROJECT SAFETY AND TRAFFIC MAINTENANCE ARE THE SOLE RESPONSIBILITY OF THE CONTRACTOR.

6. UTILITIES AND UTILITY STRUCTURES WHOSE LOCATIONS ARE UNKNOWN MAY BE AFFECTED BY THE PROPOSED WORK. UPON FINDING SUCH UTILITIES, THE CONTRACTORS RESPONSIBILITY SHALL BE TO NOTIFY THE OWNER AND MAINTAIN THE UTILITIES IN WORKING ORDER UNTIL THEIR DISPOSITION IS RESOLVED.

7. CONTRACTOR TO COORDINATE WITH ALL COMPANIES TO ASSURE ADEQUATE SUPPLY AND SCHEDULING OF NEW SERVICE WHERE REQUIRED, TO FIT THE CONSTRUCTION SCHEDULING AND SEQUENCE TO ASSURE NO DAMAGE OR DISTURBANCE TO COMPLETED WORK.

8. ALL NEW UTILITY SERVICE CONNECTIONS, INCLUDING LINES AND EQUIPMENT FOR PROVIDING POWER AND/OR COMMUNICATIONS, ARE TO BE INSTALLED UNDERGROUND.

9. THE EXTENT OF THE CONSTRUCTION AND DISTURBANCE AREAS SHALL BE THE MINIMUM REQUIRED TO PERFORM THE CONTRACT WORK WITH AS MINIMAL EFFECT ON ADJACENT AREAS AS POSSIBLE.

10. ALL NEW STORM DRAINAGE PIPING TO BE SMOOTH BORE CORRUGATED HIGH DENSITY POLYETHYLENE (HDPE) UNLESS OTHERWISE SPECIFIED.

11. ROOF LEADERS WHERE REQUIRED TO BE 4" DIA. SDR 35 PVC PIPE AND WILL OUTLET TO DOWNSPOUTS ADJACENT TO THE PROPOSED BUILDINGS.

12. ALL NEW WATER MAINS AND RELATED APPURTENANCES TO BE SPECIFIED BY ARCHITECT'S MECHANICAL ENGINEER.

13. ALL SANITARY HOUSE CONNECTIONS TO BE 6" DIA. CAST IRON WITH A MINIMUM GRADE OF .02 TO THE FIRST CLEAN OUT OUTSIDE THE BUILDING. BEYOND THE FIRST CLEAN OUT, SDR 35 PVC PIPE MAY BE USED IN LIEU OF CAST IRON.

14. ANY SUBSTITUTIONS TO BE REQUESTED IN WRITING AND APPROVED BY THE DESIGN ENGINEER PRIOR TO CONSTRUCTION.

15. CONTRACTOR SHALL OBTAIN ALL NECESSARY PERMITS WITH REGARDS TO DEMOLITION AND DISPOSAL OF EXISTING STRUCTURES.

16. ANY EXISTING HOUSE CONNECTION PROPOSED TO BE ABANDONED MUST BE PLUGGED BETWEEN THE EDGE OF THE RIGHT-OF-WAY AND THE CURB LINE WITH A PERMANENT WATERTIGHT PLUG OR CAP ENCASED IN CONCRETE.

17. WHERE FINISHED GRADE ELEVATION AT BUILDING WALL IS LESS THAN 24" BELOW THE FINISHED FLOOR CONSULT WITH ARCHITECT FOR CHANGES IN FOUNDATION AND SILL DESIGN.

18. CONTRACTOR TO OBTAIN AND SUBMIT SHOP DRAWINGS FOR ALL STRUCTURES TO DESIGN ENGINEER FOR REVIEW AND APPROVAL BEFORE MANUFACTURING.

19. RETAINING WALLS SHALL BE LESS THAN 4 FEET IN HEIGHT. RETAINING WALLS MORE THAN 4 FEET IN HEIGHT ARE REQUIRED TO BE DESIGNED BY A CERTIFIED STRUCTURAL ENGINEER.

20. THE EXISTING WELL IS TO BE DECOMMISSIONED IN ACCORDANCE WITH ARTICLE II OF THE ROCKLAND COUNTY SANITARY CODE UNLESS A REVISED LETTER TO THE CONTRARY FROM THE ROCKLAND COUNTY DEPARTMENT OF HEALTH IS RECEIVED PRIOR TO ISSUANCE OF A CERTIFICATE OF OCCUPANCY.

21. AN INTERIOR CLASS VALVE SHALL BE PROVIDED ON THE SOIL LINE IF CAST IRON INVERT IS BELOW THE UPSTREAM MANHOLE RIM ELEVATION.

EROSION CONTROL INFORMATION:

EROSION AND SEDIMENT CONTROL PLAN - CONSTRUCTION SEQUENCE

1. ALL EROSION AND SEDIMENT CONTROL MEASURES SHALL BE IN PLACE PRIOR TO ANY GRADING OPERATIONS AND INSTALLATION OF PROPOSED STRUCTURES AND OR UTILITIES.
2. ALL EROSION AND SEDIMENT CONTROL MEASURES SHALL REMAIN IN PLACE AND BE MAINTAINED UNTIL CONSTRUCTION IS COMPLETED AND/OR STABILIZED.
3. INSTALL STABILIZED CONSTRUCTION ENTRANCE AS INDICATED ON PLAN.
4. INSTALL SILT FENCE DOWN SLOPE OF ALL AREAS TO BE DISTURBED AND DOWN SLOPE OF ALL AREAS DESIGNATED FOR TOPSOIL STOCKPILING.
5. CONSTRUCT BERMS, TEMPORARY SWALES AND PIPES AS NECESSARY TO DIRECT RUNOFF TO TEMPORARY SEDIMENTATION ENTRAPMENT AREAS.
6. CLEAR EXISTING TREES, VEGETATION AND EXISTING STRUCTURES FROM AREAS TO BE FILLED OR EXCAVATED. STRIP AND STOCKPILE TOPSOIL FROM AREAS TO BE DISTURBED. SEED STOCKPILED TOPSOIL WITH TEMPORARY RYE GRASS COVER.
7. PERFORM EXCAVATION AND FILL TO BRING LAND TO DESIRED GRADE. ANY DISTURBED AREAS TO REMAIN BARE SHOULD BE SEEDED WITH TEMPORARY RYE GRASS.
8. INSTALL UNDERGROUND UTILITIES, MANHOLES AND CATCH BASINS. GRATES OF CURB AND FIELD INLETS SHOULD BE LEFT AT ELEVATIONS WHICH PERMIT PROPER COLLECTION OF SURFACE RUNOFF.
9. INSTALL INLET PROTECTION AT CURB AND FIELD INLETS.
10. CONSTRUCT CURBS AND INSTALL BASE AND BINDER COURSES OF PAVED AREAS. RAISE GRATES OF THE CURB AND FIELD INLETS ACCORDINGLY.
11. COMPLETE THE GRADING.
12. INSTALL SURFACE COURSE OF PAVEMENT. RAISE GRATES OF CURBS AND FIELD INLETS TO FINAL ELEVATION.
13. UPON COMPLETION OF CONSTRUCTION, ALL DISTURBED AREAS ARE TO BE SEEDED WITH 1/2 LB. OF RYE GRASS PER 1,000 SQUARE FEET OR DISTURBED AREA. ALL TEMPORARY DEVICES SHALL BE REMOVED AND THE AFFECTED AREAS REGRADED, PLANTED OR TREATED IN ACCORDANCE WITH THE APPROVED SITE PLANS.
14. FOR INDIVIDUAL HOUSE & SEPTIC CONSTRUCTION FOLLOW STEPS #1 TO #13 WHERE APPLICABLE.
15. BARE SOIL SHOULD BE SEEDED WITHIN 14 DAYS OF EXPOSURE. WHENEVER CONSTRUCTION IS SUSPENDED OR COMPLETED, AREAS SHOULD BE SEEDED DOWN OR MULCHED IMMEDIATELY. UPON COMPLETION, A PERENNIAL MIX NEEDS TO BE USED TO ENSURE CONTINUAL STABILIZATION.

STANDARD EROSION CONTROL NOTES

AN EROSION CONTROL SYSTEM WILL BE UTILIZED BY THE DEVELOPER TO MINIMIZE THE PRODUCTION OF SEDIMENT FROM THE SITE. METHODS TO BE UTILIZED WILL BE THOSE FOUND MOST EFFECTIVE FOR THE SITE AND SHALL INCLUDE ONE OR MORE OF THE FOLLOWING, AS APPLICABLE:

1. TEMPORARY SEDIMENTATION ENTRAPMENT AREAS SHALL BE PROVIDED AT KEY LOCATIONS TO INTERCEPT AND CLARIFY SILT LADEN RUNOFF FROM THE SITE. THESE MAY BE EXCAVATED OR MAY BE CREATED UTILIZING EARTHEN BERMS, RIP-RAP, CRUSHED STONE DAMS, OR OTHER SUITABLE MATERIALS. DIVERSION SWALES, BERMS, OR OTHER CHANNELIZATION SHALL BE CONSTRUCTED TO INSURE THAT ALL SILT LADEN WATERS ARE DIRECTED INTO THE ENTRAPMENT AREAS, WHICH SHALL BE CLEANED PERIODICALLY DURING THE COURSE OF CONSTRUCTION. THE COLLECTED SILT SHALL BE DEPOSITED IN AREAS SAFE FROM FURTHER EROSION.
2. ALL DISTURBED AREAS, EXCEPT ROADWAYS, WHICH WILL REMAIN UNFINISHED FOR MORE THAN 14 DAYS SHALL BE TEMPORARILY SEEDED WITH 1/2 LB. OF RYE GRASS OR MULCHED WITH 100 LBS. OF STRAW OR HAY PER 1,000 SQUARE FEET. ROADWAYS SHALL BE STABILIZED AS RAPIDLY AS PRACTICAL BY INSTALLATION OF THE BASE COURSE.
3. SILT THAT LEAVES THE SITE IN SPITE OF THE REQUIRED PRECAUTIONS SHALL BE COLLECTED AND REMOVED AS DIRECTED BY APPROPRIATE MUNICIPAL AUTHORITIES.
4. AT THE COMPLETION OF THE PROJECT, ALL TEMPORARY SILTATION DEVICES SHALL BE REMOVED AND THE AFFECTED AREAS REGRADED, PLANTED, OR TREATED IN ACCORDANCE WITH THE APPROVED SITE PLANS.
5. PROVIDE INLET PROTECTION TO ALL INLETS ON SITE. (SEE DETAIL)

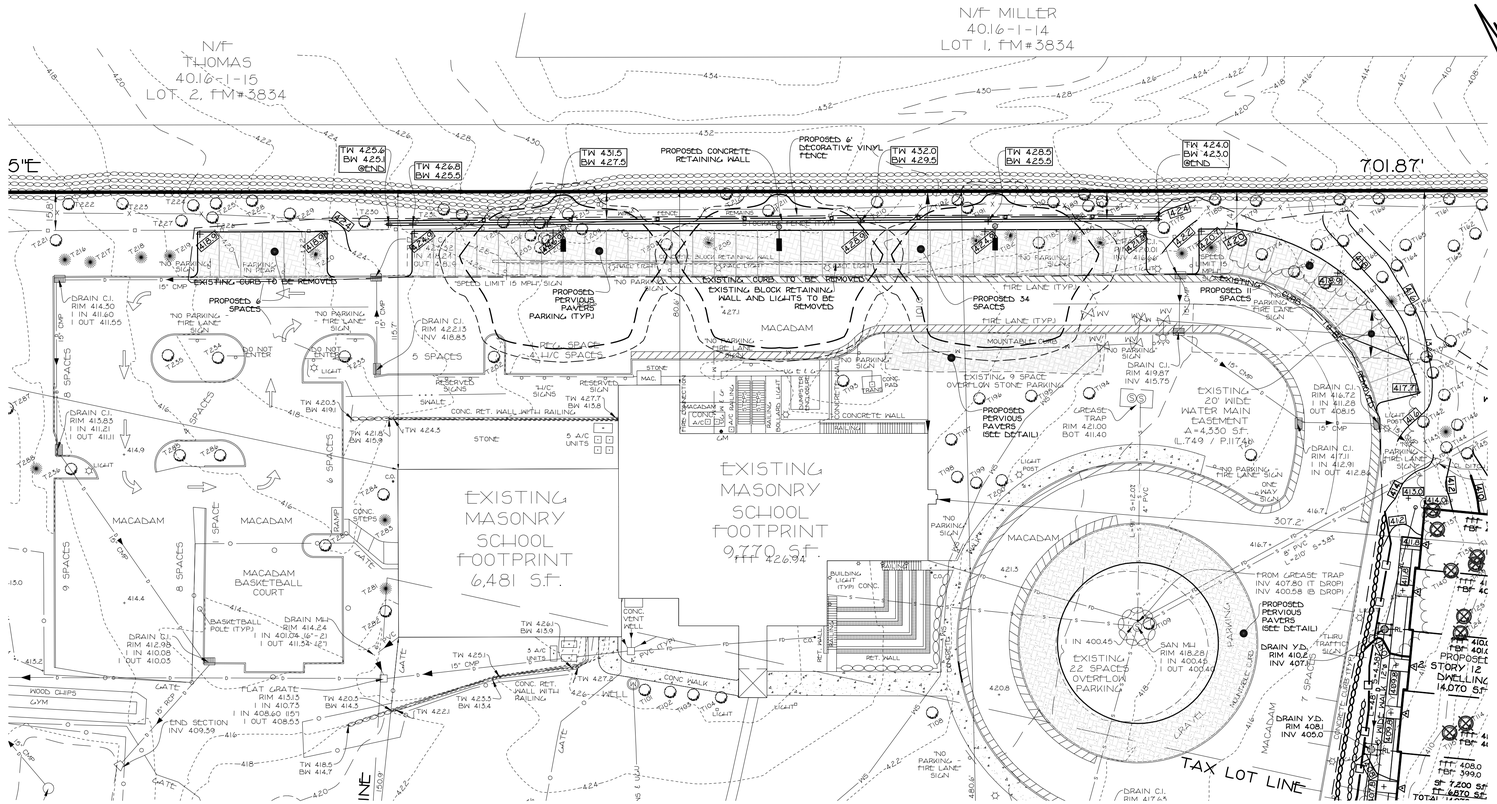

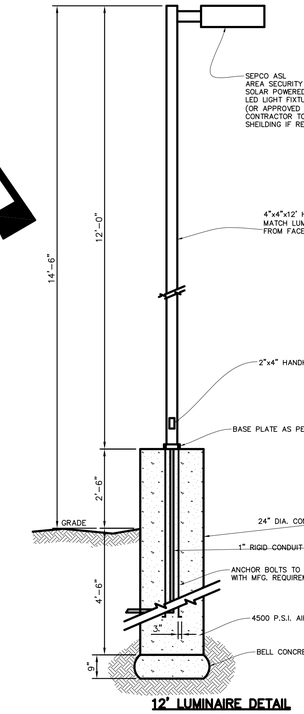

12' LUMINAIRE DETAIL
N.T.S.

NOTE: LIGHT HEADS SHALL BE ADJUSTED AND CUT-OFFS INSTALLED TO PREVENT LIGHT FROM PROJECTING ON TO NEIGHBORING PROPERTIES AND R.O.W.

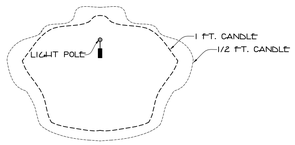

TYPICAL ISOLUX
N.T.S.

MINIMUM AREA CALCULATIONS:
NOT MORE THAN 25% OF ANY LAND WITHIN UTILITY EASEMENTS OR OTHER EASEMENTS, OR WITH UNEXCAVATED SLOPES OVER 25% SHALL BE COUNTED TOWARD THE MINIMUM LOT AREA

TOTAL SITE AREA ..... 13.047 ACRES
(568,327 SF)

LESS STEEP SLOPES AREAS
SLOPES >25% = 25,635 SF. = 0.5885 AC.
MINUS 75% OF SLOPES >25%
0.75 X 0.5885 ..... 0.4414 AC.

LESS 75% OF EASEMENT AREAS
WATER EASEMENT = 4,330 SF. = 0.0994 AC.
MINUS 75% WATER EASEMENT
0.75 X 0.0994 ..... 0.0746 AC.
SIGHT EASEMENT = 12,343 SF. = 0.2834 AC.
MINUS 75% SIGHT EASEMENT
0.75 X 0.2834 ..... 0.2125 AC.

TOTAL AREA OF DEDUCTIONS..... 0.7285 ACRES

13.047 AC. - 0.7285 AC. = 12.3181 AC.
TOTAL NET AREA ..... 12.3181 ACRES
(536,577 SF)

BUILDING COVERAGE RATIO CALCULATIONS:
BLDG. COVER. / ZONING AREA = RATIO
EXISTING
20,979 SF. / 536,577 SF. = 0.0391 (0.04)
PROPOSED
37,071 SF. / 536,577 SF. = 0.0691 (0.07)

IMPERVIOUS SURFACE RATIO CALCULATIONS:
IMPERVIOUS / ZONING AREA = RATIO
EXISTING
108,909 SF. / 536,577 SF. = 0.2030 (0.21)
PROPOSED
127,561 SF. / 536,577 SF. = 0.2377 (0.24)

FRONT YARD IMP. SURFACE RATIO CALCULATIONS:
F.Y. IMP. / F.Y. AREA = RATIO
EXISTING
28,288 SF. / 207,715 SF. = 0.1362 (0.14)
PROPOSED
3,232 SF. / 62,852 SF. = 0.0514 (0.06)

PARKING CALCULATIONS:
1 SPACE PER 1,000 SF OF GROSS FLOOR AREA PLUS 2 SPACES FOR RESIDENCE

88,215 / 1,000 = 88.215 (89) SPACES

89 + 2 = 91 SPACES REQUIRED

PARKING COUNT:
EXISTING
53 SPACES AT SCHOOL
4 SPACES AT CARETAKER'S RESIDENCE
6 SPACES AT DORMITORY
63 PERMANENT SPACES

31 OVERFLOW SPACES AT SCHOOL

94 TOTAL EXISTING PARKING SPACES

PROPOSED
51 SPACES AT SCHOOL
19 SPACES AT DORMITORY & CARETAKER'S RESIDENCE
24 SPACES AT FACULTY HOUSING
94 PROPOSED SPACES

EXISTING SPACES LOST
6 SPACES AT DORMITORY
4 SPACES AT CARETAKER'S RESIDENCE
10 SPACES LOST

94 PROP. SPACES + 94 TOT. EX. SPACES - 10 LOST SPACE= 178 SPACES

BULK TABLE

ZONE R-50	MINIMUM LOT AREA	LOT FRONTAGE (FEET)	LOT WIDTH (FEET)	EFFECTIVE SQUARE (FEET)	FRONT YARD (FEET)	SIDE YARD (FEET)	TOTAL SIDE YARD	REAR YARD (FEET)	MAXIMUM IMPERVIOUS SURFACE	FRONT YARD IMPERVIOUS SURFACE	MAXIMUM BUILDING COVERAGE	BUILDING HEIGHT STORIES	MAXIMUM BUILDING HEIGHT	MAXIMUM EXPOSED BLDG. HGT.	OFF-STREET PARKING
REQUIRED	50,000 S.F.	100	150	150	50	30	75	50	0.20	0.15	0.10	2.5	25	40	91
EXISTING	536,577 S.F.	1,148	1,108	150	192.7	80	161.7	432.8	0.21***	0.14	0.04	2.5	39.7*	39.7	94
PROPOSED	536,577 S.F.	1,148	1,108	150	55	80	161.7	432.8	0.24	0.06	0.07	2.5	39.7*	39.7	178**
VARIANCE REQUIRED									YES						

*VARIANCE GRANTED JUNE 20, 2000 BLDG HGT 39.7' FOR EAST END OF DORMITORY
**INCLUDING 31 SPACES FOR OVERFLOW (22 IN ISLAND AND 9 ON STONE)
*** EXISTING NON-CONFORMING

ALL UTILITIES ARE SHOWN IN AN APPROXIMATE WAY FROM AVAILABLE INFORMATION. THE CONTRACTOR SHALL CALL THE LOCAL UNDERGROUND FACILITIES PROTECTIVE ORGANIZATION TO HAVE ALL UNDERGROUND UTILITIES MARKED IN THE FIELD PRIOR TO ANY CLEARING OR ANY CONSTRUCTION. THE CONTRACTOR SHALL ALSO VERIFY THE LOCATION, SIZE AND INVERT OF ALL UTILITIES PRIOR TO ANY CONSTRUCTION. ANY UTILITY FOR WHICH NO EVIDENCE CAN BE SEEN ON THE SURFACE OF THE LANDS MAY NOT BE SHOWN ON THIS DRAWING.

16 NYCRR PART 753
REQUIRES 2 WORKING DAYS NOTICE PRIOR TO START OF ANY UNDERGROUND WORK
DIG SAFELY NEW YORK
WWW.DIGSAFELY.NEWYORK.COM
1-800-962-7962

REVISIONS

1. REV: UPDATED BULK TABLES-10/16/23
2. REV: WALK OUT BASEMENTS, GRADING, DRAINAGE, WALLS-1/9/25

STEVEN M. SPARACO, PE
18 NORTH MAIN STREET
HARRIMAN, NEW YORK 10926
(845) 782-8543

STATE OF NEW YORK · STEVEN MICHAEL SPARACO · 079513 · LICENSED PROFESSIONAL ENGINEER

PART PLAN (SCHOOL)
FOR
YESHIVAS OHR REUVEN
LOCATED IN
VILLAGE OF WESLEY HILLS
TOWN OF RAMAPO
ROCKLAND COUNTY, NEW YORK
GRAPHIC SCALE
20 10 0 20 40 60

SPARACO & YOUNGBLOOD, PLLC
CIVIL ENGINEERING * LAND SURVEYING
SITE PLANNING
18 NORTH MAIN STREET
P.O. BOX 818
HARRIMAN, N.Y. 10926
TEL: (845) 782-8543
FAX: (845) 782-5901
SPARACO.STEVE@SELSNY.COM WDYLS1@GMAIL.COM

FILE #	SP-4601
DATE	JUNE 3, 2021
SCALE	1" = 30'
DWG #	2 OF 8

GENERAL NOTES:

1. CONTRACTOR TO VERIFY LOCATION, SIZE AND INVERTS OF ALL EXISTING UTILITIES PRIOR TO CONSTRUCTION.

2. CONTRACTOR SHALL CONTACT ALL UTILITY COMPANIES AND HAVE ALL UTILITIES FIELD LOCATED BY RESPECTIVE UTILITY COMPANY AND SHALL ASSUME FULL RESPONSIBILITY AND SHALL BE SOLELY RESPONSIBLE FOR MAINTAINING CONTINUOUS UTILITY SERVICE AND REPAIRS TO ANY DAMAGE.

3. ALL EXISTING OFF-SITE PAVEMENT, FENCES, CURBS, WALKS AND OTHER FACILITIES DISTURBED BY CONSTRUCTION SHALL BE RESTORED OR REPLACED BY THE CONTRACTOR AT NO ADDITIONAL COST.

4. EXISTING UTILITIES & STRUCTURES THAT ARE TO BE REMOVED AND/OR REPLACED SHALL BE REMOVED AND LEGALLY DISPOSED OF BY THE CONTRACTOR.

5. PROJECT SAFETY AND TRAFFIC MAINTENANCE ARE THE SOLE RESPONSIBILITY OF THE CONTRACTOR.

6. UTILITIES AND UTILITY STRUCTURES WHOSE LOCATIONS ARE UNKNOWN MAY BE AFFECTED BY THE PROPOSED WORK. UPON FINDING SUCH UTILITIES, THE CONTRACTORS RESPONSIBILITY SHALL BE TO NOTIFY THE OWNER AND MAINTAIN THE UTILITIES IN WORKING ORDER UNTIL THEIR DISPOSITION IS RESOLVED.

7. CONTRACTOR TO COORDINATE WITH ALL COMPANIES TO ASSURE ADEQUATE SUPPLY AND SCHEDULING OF NEW SERVICE WHERE REQUIRED, TO FIT THE CONSTRUCTION SCHEDULING AND SEQUENCE TO ASSURE NO DAMAGE OR DISTURBANCE TO COMPLETED WORK.

8. ALL NEW UTILITY SERVICE CONNECTIONS, INCLUDING LINES AND EQUIPMENT FOR PROVIDING POWER AND/OR COMMUNICATIONS, ARE TO BE INSTALLED UNDERGROUND.

9. THE EXTENT OF THE CONSTRUCTION AND DISTURBANCE AREAS SHALL BE THE MINIMUM REQUIRED TO PERFORM THE CONTRACT WORK WITH AS MINIMAL EFFECT ON ADJACENT AREAS AS POSSIBLE.

10. ALL NEW STORM DRAINAGE PIPING TO BE SMOOTH BORE CORRUGATED HIGH DENSITY POLYETHYLENE (HDPE) UNLESS OTHERWISE SPECIFIED.

11. ROOF LEADERS WHERE REQUIRED TO BE 4" DIA. SDR 35 PVC PIPE AND WILL OUTLET TO DOWNSPOUTS ADJACENT TO THE PROPOSED BUILDINGS.

12. ALL NEW WATER MAINS AND RELATED APPURTENANCES TO BE SPECIFIED BY ARCHITECT'S MECHANICAL ENGINEER.

13. ALL SANITARY HOUSE CONNECTIONS TO BE 6" DIA. CAST IRON WITH A MINIMUM GRADE OF 1/4 TO THE FIRST CLEAN OUT OUTSIDE THE BUILDING. BEYOND THE FIRST CLEAN OUT, SDR 35 PVC PIPE MAY BE USED IN LIEU OF CAST IRON.

14. ANY SUBSTITUTIONS TO BE REQUESTED IN WRITING AND APPROVED BY THE DESIGN ENGINEER PRIOR TO CONSTRUCTION.

15. CONTRACTOR SHALL OBTAIN ALL NECESSARY PERMITS WITH REGARDS TO DEMOLITION AND DISPOSAL OF EXISTING STRUCTURES.

16. ANY EXISTING HOUSE CONNECTION PROPOSED TO BE ABANDONED MUST BE PLUGGED BETWEEN THE EDGE OF THE RIGHT-OF-WAY AND THE CURB LINE WITH A PERMANENT WATERTIGHT PLUG OR CAP ENCASED IN CONCRETE.

17. WHERE FINISHED GRADE ELEVATION AT BUILDING WALL IS LESS THAN 24" BELOW THE FINISHED FLOOR CONSULT WITH ARCHITECT FOR CHANGES IN FOUNDATION AND SILL DESIGN.

18. CONTRACTOR TO OBTAIN AND SUBMIT SHOP DRAWINGS FOR ALL STRUCTURES TO DESIGN ENGINEER FOR REVIEW AND APPROVAL BEFORE MANUFACTURING.

19. RETAINING WALLS SHALL BE LESS THAN 4 FEET IN HEIGHT. RETAINING WALLS MORE THAN 4 FEET IN HEIGHT ARE REQUIRED TO BE DESIGNED BY A CERTIFIED STRUCTURAL ENGINEER.

*PTO24.20. THE EXISTING WELL IS TO BE DECOMMISSIONED IN ACCORDANCE WITH ARTICLE II OF THE ROCKLAND COUNTY SANITARY CODE UNLESS A REVISED LETTER TO THE CONTRARY FROM THE ROCKLAND COUNTY DEPARTMENT OF HEALTH IS RECEIVED PRIOR TO ISSUANCE OF A CERTIFICATE OF OCCUPANCY.
*PT2.
21. THIS PLAN IS BASED ON ARCHITECTURAL PLANS BY MAYERFELD ARCHITECTURE, PLLC RECEIVED ON XXX.

*PTO24.22. AN INTERIOR CHECK VALVE SHALL BE PROVIDED ON THE SOIL LINE IF CAST IRON INVERT IS BELOW THE UPSTREAM MANHOLE RIM ELEVATION.

EROSION CONTROL INFORMATION:

EROSION AND SEDIMENT CONTROL PLAN - CONSTRUCTION SEQUENCE

1. ALL EROSION AND SEDIMENT CONTROL MEASURES SHALL BE IN PLACE PRIOR TO ANY GRADING OPERATIONS AND INSTALLATION OF PROPOSED STRUCTURES AND OR UTILITIES.
2. ALL EROSION AND SEDIMENT CONTROL MEASURES SHALL REMAIN IN PLACE AND BE MAINTAINED UNTIL CONSTRUCTION IS COMPLETED AND/OR STABILIZED.
3. INSTALL STABILIZED CONSTRUCTION ENTRANCE AS INDICATED ON PLAN.
4. INSTALL SILT FENCE DOWN SLOPE OF ALL AREAS TO BE DISTURBED AND DOWN SLOPE OF ALL AREAS DESIGNATED FOR TOPSOIL STOCKPILING.
5. CONSTRUCT BERMS, TEMPORARY SWALES AND PIPES AS NECESSARY TO DIRECT RUNOFF TO TEMPORARY SEDIMENTATION ENTRAPMENT AREAS.
6. CLEAR EXISTING TREES, VEGETATION AND EXISTING STRUCTURES FROM AREAS TO BE FILLED OR EXCAVATED. STRIP AND STOCKPILE TOPSOIL FROM AREAS TO BE DISTURBED. SEED STOCKPILED TOPSOIL WITH TEMPORARY RYE GRASS COVER.
7. PERFORM EXCAVATION AND FILL TO BRING LAND TO DESIRED GRADE. ANY DISTURBED AREAS TO REMAIN BARE SHOULD BE SEEDED WITH TEMPORARY RYE GRASS.
8. INSTALL UNDERGROUND UTILITIES, MANHOLES AND CATCH BASINS. GRATES OF CURB AND FIELD INLETS SHOULD BE LEFT AT ELEVATIONS WHICH PERMIT PROPER COLLECTION OF SURFACE RUNOFF.
9. INSTALL INLET PROTECTION AT CURB AND FIELD INLETS.
10. CONSTRUCT CURBS AND INSTALL BASE AND BINDER COURSES OF PAVED AREAS. RAISE GRATES OF THE CURB AND FIELD INLETS ACCORDINGLY.
11. COMPLETE THE GRADING.
12. INSTALL SURFACE COURSE OF PAVEMENT. RAISE GRATES OF CURBS AND FIELD INLETS TO FINAL ELEVATION.
13. UPON COMPLETION OF CONSTRUCTION, ALL DISTURBED AREAS ARE TO BE SEEDED WITH 1/2 LB. OF RYE GRASS PER 1,000 SQUARE FEET OR DISTURBED AREA. ALL TEMPORARY DEVICES SHALL BE REMOVED AND THE AFFECTED AREAS REGRADED, PLANTED OR TREATED IN ACCORDANCE WITH THE APPROVED SITE PLANS.
14. FOR INDIVIDUAL HOUSE & SEPTIC CONSTRUCTION FOLLOW STEPS #1 TO #13 WHERE APPLICABLE.
15. BARE SOIL SHOULD BE SEEDED WITHIN 14 DAYS OF EXPOSURE; WHENEVER CONSTRUCTION IS SUSPENDED OR COMPLETED, AREAS SHOULD BE SEEDED DOWN OR MULCHED IMMEDIATELY. UPON COMPLETION, A PERENNIAL MIX NEEDS TO BE USED TO ENSURE CONTINUAL STABILIZATION.

STANDARD EROSION CONTROL NOTES

AN EROSION CONTROL SYSTEM WILL BE UTILIZED BY THE DEVELOPER TO MINIMIZE THE PRODUCTION OF SEDIMENT FROM THE SITE. METHODS TO BE UTILIZED WILL BE THOSE FOUND

MOST EFFECTIVE FOR THE SITE AND SHALL INCLUDE ONE OR MORE OF THE FOLLOWING, AS APPLICABLE:

1. TEMPORARY SEDIMENTATION ENTRAPMENT AREAS SHALL BE PROVIDED AT KEY LOCATIONS

   TO INTERCEPT AND CLARIFY SILT LADEN RUNOFF FROM THE SITE. THESE MAY BE EXCAVATED OR MAY BE CREATED UTILIZING EARTHEN BERMS, RIP-RAP, CRUSHED STONE DAMS, OR OTHER SUITABLE MATERIALS. DIVERSION SWALES, BERMS, OR OTHER CHANNELIZATION SHALL BE CONSTRUCTED TO INSURE THAT ALL SILT LADEN WATERS ARE DIRECTED INTO THE ENTRAPMENT AREAS, WHICH SHALL BE CLEANED PERIODICALLY DURING

   THE COURSE OF CONSTRUCTION. THE COLLECTED SILT SHALL BE DEPOSITED IN AREAS SAFE

   FROM FURTHER EROSION.

2. ALL DISTURBED AREAS, EXCEPT ROADWAYS, WHICH WILL REMAIN UNFINISHED FOR MORE THAN 14 DAYS SHALL BE TEMPORARILY SEEDED WITH 1/2 LB. OF RYE GRASS OR MULCHED WITH 100 LBS. OF STRAW OR HAY PER 1,000 SQUARE FEET. ROADWAYS SHALL BE STABILIZED AS RAPIDLY AS PRACTICAL BY INSTALLATION OF THE BASE COURSE.
3. SILT THAT LEAVES THE SITE IN SPITE OF THE REQUIRED PRECAUTIONS SHALL BE COLLECTED AND REMOVED AS DIRECTED BY APPROPRIATE MUNICIPAL AUTHORITIES.
4. AT THE COMPLETION OF THE PROJECT, ALL TEMPORARY SILTATION DEVICES SHALL BE REMOVED AND THE AFFECTED AREAS REGRADED, PLANTED, OR TREATED IN ACCORDANCE WITH THE APPROVED SITE PLANS.
5. PROVIDE INLET PROTECTION TO ALL INLETS ON SITE (SEE DETAIL)

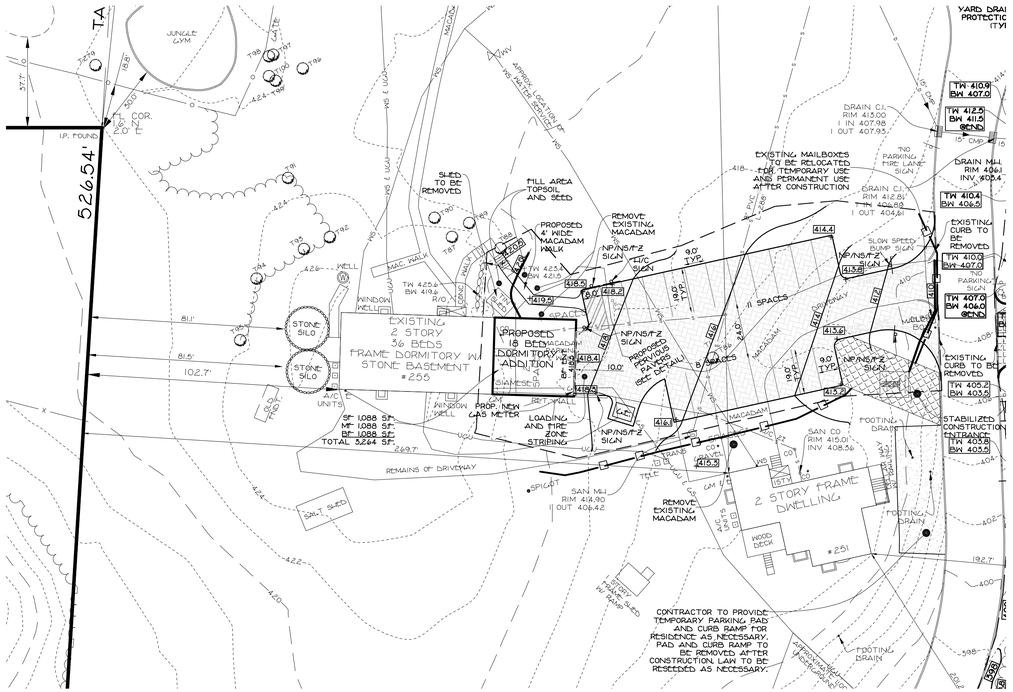

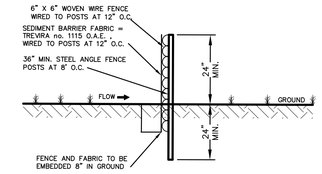

NOTES:
1. THIS FENCE IS AN ALTERNATE TO HAY BALE SEDIMENT BARRIER
2. MAINTAIN FENCE TO INSURE SEDIMENT ENTRAPMENT QUALITIES DURING CONSTRUCTION.
3. REMOVE EXCESS SILT PERIODICALLY AND WHEN BULGES DEVELOPE.
4. FENCE SYMBOL ON PLAN

SEDIMENT BARRIER FENCE

N.T.S.

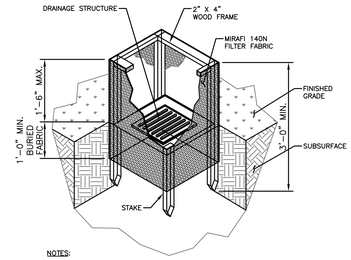

NOTES:
1. FILTER FABRIC SHALL HAVE AN EOS OF 40-85. BURLAP MAY BE USED

   FOR SHORT TERM APPLICATIONS.
2. CUT FABRIC FROM A CONTINUOUS ROLL TO ELIMINATE JOINTS. IF JOINTS

   ARE NEEDED THEY WILL BE OVERLAPPED TO THE NEXT STAKE.
3. STAKE MATERIALS WILL BE STANDARD 2" X 4" WOOD OR EQUIVALENT. METAL WITH A MINIMUM LENGTH OF 3 FEET.
4. SPACE STAKES EVENLY AROUND INLET 3 FEET APART AND DRIVE A MINIMUM 18 INCHES DEEP. SPANS GREATER THAN 3 FEET MAY BE BRIDGED WITH THE USE OF WIRE MESH BEHIND THE FILTER FABRIC FOR

   SUPPORT.
5. FABRIC SHALL BE EMBEDDED 1 FOOT MINIMUM BELOW GROUND AND BACKFILLED. IT SHALL BE SECURELY FASTENED TO THE STAKES AND FRAME.
6. A 2" x 4" WOOD FRAME SHALL BE COMPLETED AROUND THE CREST OF

   THE FABRIC FOR OVER FLOW STABILITY.
7. SYMBOL:

FIELD INLET PROTECTION DETAIL

N.T.S.

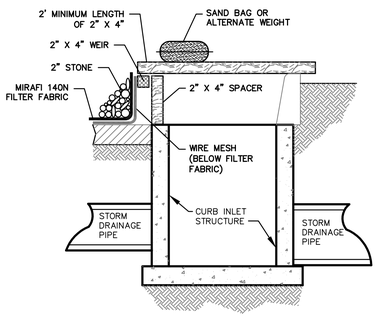

NOTES:
1. FILTER FABRIC SHALL HAVE AN EOS OF 40-85.
2. WOODEN FRAME SHALL BE CONSTRUCTED OF 2" X 4" CONSTRUCTION GRADE LUMBER.
3. WIRE MESH ACROSS THROAT SHALL BE A CONTINUOUS PIECE 30 INCH MINIMUM WIDTH WITH A LENGTH 4 FEET LONGER THAN THE THROAT. IT SHALL BE SHAPED AND SECURELY NAILED TO A 2" X 4" WEIR.
4. THE WEIR SHALL BE SECURELY NAILED TO 2" X 4" SPACERS 9 INCHES LONG SPACED NO MORE THAN 6 FEET APART.
5. THE ASSEMBLY SHALL BE PLACED AGAINST THE INLET AND SECURED BY 2" X 4" ANCHORS 2 FEET LONG EXTENDING ACROSS THE TOP OF THE INLET AND HELD IN PLACE BY SAND BAGS OR ALTERNATE WEIGHTS.
6. SYMBOL

CURB INLET PROTECTION DETAIL

N.T.S.

MINIMUM AREA CALCULATIONS:
NOT MORE THAN 25% OF ANY LAND WITHIN UTILITY EASEMENTS OR OTHER EASEMENTS, OR WITH UNEXCAVATED SLOPES OVER 25% SHALL BE COUNTED TOWARD THE MINIMUM LOT AREA

TOTAL SITE AREA ..... 13.047 ACRES
(568,527 SF.)

LESS STEEP SLOPES AREAS
SLOPES >25% = 25,635 SF. = 0.5885 AC.
MINUS 75% OF SLOPES >25%
0.75 X 0.5885 ..... 0.4414 AC.

LESS 75% OF EASEMENT AREAS
WATER EASEMENT = 4,330 SF. = 0.0994 AC.
MINUS 75% WATER EASEMENT
0.75 X 0.0994 ..... 0.0746 AC.
SIGHT EASEMENT = 12,343 SF. = 0.2834 AC.
MINUS 75% SIGHT EASEMENT
0.75 X 0.2834 ..... 0.2125 AC.

TOTAL AREA OF DEDUCTIONS..... 0.7285 ACRES

13.047 AC. - 0.7285 AC. = 12.3181 AC.
TOTAL NET AREA ..... 12.3181 ACRES
(536,577 SF.)

BUILDING COVERAGE RATIO CALCULATIONS:
BLDG. COVER. / ZONING AREA = RATIO
EXISTING
20,979 SF. / 536,577 SF. = 0.0391 (0.04)
PROPOSED
37,071 SF. / 536,577 SF. = 0.0691 (0.07)

IMPERVIOUS SURFACE RATIO CALCULATIONS:
IMPERVIOUS / ZONING AREA = RATIO
EXISTING
108,909 SF. / 536,577 SF. = 0.2030 (0.21)
PROPOSED
127,561 SF. / 536,577 SF. = 0.2377 (0.24)

FRONT YARD IMP. SURFACE RATIO CALCULATIONS:
F.Y. IMP. / F.Y. AREA = RATIO
EXISTING
28,288 SF. / 207,715 SF. = 0.1362 (0.14)
PROPOSED
3,232 SF. / 62,852 SF. = 0.0514 (0.06)

PARKING CALCULATIONS:
1 SPACE PER 1,000 SF OF GROSS FLOOR AREA
PLUS 2 SPACES FOR RESIDENCE

88,215 / 1,000 = 88.215 (89) SPACES

89 + 2 = 91 SPACES REQUIRED

PARKING COUNT:
EXISTING
53 SPACES AT SCHOOL
4 SPACES AT CARETAKER'S RESIDENCE
6 SPACES AT DORMITORY
63 PERMANENT SPACES

31 OVERFLOW SPACES AT SCHOOL

94 TOTAL EXISTING PARKING SPACES

PROPOSED
51 SPACES AT SCHOOL
19 SPACES AT DORMITORY & CARETAKER'S RESIDENCE
24 SPACES AT FACULTY HOUSING
94 PROPOSED SPACES

EXISTING SPACES LOST
6 SPACES AT DORMITORY
4 SPACES AT CARETAKER'S RESIDENCE
10 SPACES LOST

94 PROP. SPACES + 94 TOT. EX. SPACES - 10 LOST SPACE= 178 SPACES

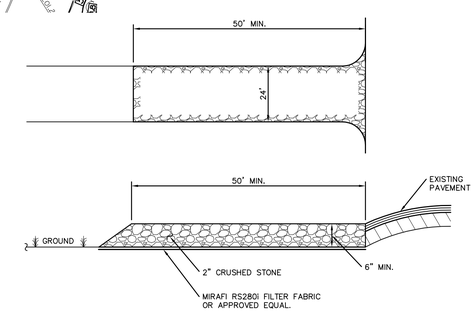

NOTES:
1. ENTRANCE SHALL BE MAINTAINED AS CONDITIONS DEMAND TO PREVENT TRACKING OF SEDIMENT ONTO PUBLIC ROADS.

STABILIZED CONSTRUCTION ENTRANCE

N.T.S.

ALL UTILITIES ARE SHOWN IN AN APPROXIMATE WAY FROM AVAILABLE INFORMATION. THE CONTRACTOR SHALL CALL THE LOCAL UNDERGROUND FACILITIES PROTECTIVE ORGANIZATION TO HAVE ALL UNDERGROUND UTILITIES MARKED IN THE FIELD PRIOR TO ANY CLEARING OR ANY CONSTRUCTION. THE CONTRACTOR SHALL ALSO VERIFY THE LOCATION, SIZE AND INVERT OF ALL UTILITIES PRIOR TO ANY CONSTRUCTION. ANY UTILITY FOR WHICH NO EVIDENCE CAN BE SEEN ON THE SURFACE OF THE LANDS MAY NOT BE SHOWN ON THIS DRAWING.

16 NYCRR PART 753
REQUIRES 2 WORKING DAYS NOTICE PRIOR TO START OF ANY UNDERGROUND WORK
DIG SAFELY NEW YORK
WWW.DIGSAFELYNEWYORK.COM
1-800-962-7962

BULK TABLE

ZONE R-50	MINIMUM LOT AREA	LOT FRONTAGE (FEET)	LOT WIDTH (FEET)	EFFECTIVE SQUARE (FEET)	FRONT YARD (FEET)	SIDE YARD (FEET)	TOTAL SIDE YARD	REAR YARD (FEET)	MAXIMUM IMPERVIOUS SURFACE	FRONT YARD IMPERVIOUS SURFACE	MAXIMUM BUILDING COVERAGE	BUILDING HEIGHT STORIES	MAXIMUM BUILDING HEIGHT	MAXIMUM EXPOSED BLDG. HGT.	OFF-STREET PARKING
REQUIRED	50,000 SF.	100	150	150	50	30	75	50	0.20	0.15	0.10	2.5	25	40	91
EXISTING	536,577 SF.	1,148	1,108	150	192.7	80	161.7	432.8	0.21***	0.14	0.04	2.5	39.7*	39.7	94
PROPOSED	536,577 SF.	1,148	1,108	150	55	80	161.7	432.8	0.24	0.06	0.07	2.5	39.7*	39.7	178**
VARIANCE REQUIRED									YES						

*VARIANCE GRANTED JUNE 20, 2000 BLDG HGT 39.7' FOR EAST END OF DORMITORY
**INCLUDING 31 SPACES FOR OVERFLOW (22 IN ISLAND AND 9 ON STONE)
*** EXISTING NON-CONFORMING

STEVEN M. SPARACO, PE
18 NORTH MAIN STREET
HARRIMAN, NEW YORK 10926
(845) 782-8543

STATE OF NEW YORK · STEVEN MICHAEL SPARACO · 079513 · LICENSED PROFESSIONAL ENGINEER

REVISIONS

1. REV: UPDATED BULK TABLES-10/16/23
2. REV: WALK OUT BASEMENTS, GRADING, DRAINAGE; WALLS-1/9/25

PART PLAN (DORMITORY ADDITION) & EROSION CONTROL
FOR
YESHIVAS OHR REUVEN
LOCATED IN
VILLAGE OF WESLEY HILLS
TOWN OF RAMAPO
ROCKLAND COUNTY, NEW YORK

GRAPHIC SCALE
20 10 0 20 40 60

SPARACO & YOUNGBLOOD, PLLC
CIVIL ENGINEERING * LAND SURVEYING
SITE PLANNING
18 NORTH MAIN STREET
P.O. BOX 818
HARRIMAN, N.Y. 10926
TEL: (845) 782-8543
FAX: (845) 782-5901
SPARACO.STEVE@SELSNY.COM WDYLS1@GMAIL.COM

FILE #	SP-4601
DATE	JUNE 3, 2021
SCALE	1" = 30'
DWG #	3 OF 8

GENERAL NOTES:

1. CONTRACTOR TO VERIFY LOCATION, SIZE AND INVERTS OF ALL EXISTING UTILITIES PRIOR TO CONSTRUCTION.
2. CONTRACTOR SHALL CONTACT ALL UTILITY COMPANIES AND HAVE ALL UTILITIES FIELD LOCATED BY RESPECTIVE UTILITY COMPANY AND SHALL ASSUME FULL RESPONSIBILITY AND SHALL BE SOLELY RESPONSIBLE FOR MAINTAINING CONTINUOUS UTILITY SERVICE AND REPAIRS TO ANY DAMAGE.
3. ALL EXISTING OFF-SITE PAVEMENT, FENCES, CURBS, WALKS AND OTHER FACILITIES DISTURBED BY CONSTRUCTION SHALL BE RESTORED OR REPLACED BY THE CONTRACTOR AT NO ADDITIONAL COST.
4. EXISTING UTILITIES & STRUCTURES THAT ARE TO BE REMOVED AND/OR REPLACED SHALL BE REMOVED AND LEGALLY DISPOSED OF BY THE CONTRACTOR.
5. PROJECT SAFETY AND TRAFFIC MAINTENANCE ARE THE SOLE RESPONSIBILITY OF THE CONTRACTOR.
6. UTILITIES AND UTILITY STRUCTURES WHOSE LOCATIONS ARE UNKNOWN MAY BE AFFECTED BY THE PROPOSED WORK. UPON FINDING SUCH UTILITIES, THE CONTRACTORS RESPONSIBILITY SHALL BE TO NOTIFY THE OWNER AND MAINTAIN THE UTILITIES IN WORKING ORDER UNTIL THEIR DISPOSITION IS RESOLVED.
7. CONTRACTOR TO COORDINATE WITH ALL COMPANIES TO ASSURE ADEQUATE SUPPLY AND SCHEDULING OF NEW SERVICE WHERE REQUIRED, TO FIT THE CONSTRUCTION SCHEDULING AND SEQUENCE TO ASSURE NO DAMAGE OR DISTURBANCE TO COMPLETED WORK.
8. ALL NEW UTILITY SERVICE CONNECTIONS, INCLUDING LINES AND EQUIPMENT FOR PROVIDING POWER AND/OR COMMUNICATIONS, ARE TO BE INSTALLED UNDERGROUND.
9. THE EXTENT OF THE CONSTRUCTION AND DISTURBANCE AREAS SHALL BE THE MINIMUM REQUIRED TO PERFORM THE CONTRACT WORK WITH AS MINIMAL EFFECT ON ADJACENT AREAS AS POSSIBLE.
10. ALL NEW STORM DRAINAGE PIPING TO BE SMOOTH BORE CORRUGATED HIGH DENSITY POLYETHYLENE (HDPE) UNLESS OTHERWISE SPECIFIED.
11. ROOF LEADERS WHERE REQUIRED TO BE 4" DIA. SDR 35 PVC PIPE AND WILL OUTLET TO DOWNSPOUTS ADJACENT TO THE PROPOSED BUILDINGS.
12. ALL NEW WATER MAINS AND RELATED APPURTENANCES TO BE SPECIFIED BY ARCHITECTS MECHANICAL ENGINEER.
13. ALL SANITARY HOUSE CONNECTIONS TO BE 6" DIA. CAST IRON WITH A MINIMUM GRADE OF .22 TO THE FIRST CLEAN OUT OUTSIDE THE BUILDING. BEYOND THE FIRST CLEAN OUT, SDR 35 PVC PIPE MAY BE USED IN LIEU OF CAST IRON.
14. ANY SUBSTITUTIONS TO BE REQUESTED IN WRITING AND APPROVED BY THE DESIGN ENGINEER PRIOR TO CONSTRUCTION.
15. CONTRACTOR SHALL OBTAIN ALL NECESSARY PERMITS WITH REGARDS TO DEMOLITION AND DISPOSAL OF EXISTING STRUCTURES.
16. ANY EXISTING HOUSE CONNECTION PROPOSED TO BE ABANDONED MUST BE PLUGGED BETWEEN THE EDGE OF THE RIGHT-OF-WAY AND THE CURB LINE WITH A PERMANENT WATERTIGHT PLUG OR CAP ENCASED IN CONCRETE.
17. WHERE FINISHED GRADE ELEVATION AT BUILDING WALL IS LESS THAN 24" BELOW THE FINISHED FLOOR CONSULT WITH ARCHITECT FOR CHANGES IN FOUNDATION AND SILL DESIGN.
18. CONTRACTOR TO OBTAIN AND SUBMIT SHOP DRAWINGS FOR ALL STRUCTURES TO DESIGN ENGINEER FOR REVIEW AND APPROVAL BEFORE MANUFACTURING.
19. RETAINING WALLS SHALL BE LESS THAN 4 FEET IN HEIGHT. RETAINING WALLS MORE THAN 4 FEET IN HEIGHT ARE REQUIRED TO BE DESIGNED BY A CERTIFIED STRUCTURAL ENGINEER.

.PT0.24.20. THE EXISTING WELL IS TO BE DECOMMISSIONED IN ACCORDANCE WITH ARTICLE II OF THE ROCKLAND COUNTY SANITARY CODE UNLESS A REVISED LETTER TO THE CONTRARY FROM THE ROCKLAND COUNTY DEPARTMENT OF HEALTH IS RECEIVED PRIOR TO ISSUANCE OF A CERTIFICATE OF OCCUPANCY.

.PT.2.

21. THIS PLAN IS BASED ON ARCHITECTURAL PLANS BY MAYERFELD ARCHITECTURE PLLC RECEIVED ON XXX.

.PT0.24.22. AN INTERIOR CHECK VALVE SHALL BE PROVIDED ON THE SOIL LINE IF CAST IRON INVERT IS BELOW THE UPSTREAM MANHOLE RIM ELEVATION.

EROSION CONTROL INFORMATION:

EROSION AND SEDIMENT CONTROL PLAN - CONSTRUCTION SEQUENCE

1. ALL EROSION AND SEDIMENT CONTROL MEASURES SHALL BE IN PLACE PRIOR TO ANY GRADING OPERATIONS AND INSTALLATION OF PROPOSED STRUCTURES AND OR UTILITIES.
2. ALL EROSION AND SEDIMENT CONTROL MEASURES SHALL REMAIN IN PLACE AND BE MAINTAINED UNTIL CONSTRUCTION IS COMPLETED AND/OR STABILIZED.
3. INSTALL STABILIZED CONSTRUCTION ENTRANCE AS INDICATED ON PLAN.
4. INSTALL SILT FENCE DOWN SLOPE OF ALL AREAS TO BE DISTURBED AND DOWN SLOPE OF ALL AREAS DESIGNATED FOR TOPSOIL STOCKPILING.
5. CONSTRUCT BERMS, TEMPORARY SWALES AND PIPES AS NECESSARY TO DIRECT RUNOFF TO TEMPORARY SEDIMENTATION ENTRAPMENT AREAS.
6. CLEAR EXISTING TREES, VEGETATION AND EXISTING STRUCTURES FROM AREAS TO BE FILLED OR EXCAVATED. STRIP AND STOCKPILE TOPSOIL FROM AREAS TO BE DISTURBED. SEED STOCKPILED TOPSOIL WITH TEMPORARY RYE GRASS COVER.
7. PERFORM EXCAVATION AND FILL TO BRING LAND TO DESIRED GRADE. ANY DISTURBED AREAS TO REMAIN BARE SHOULD BE SEEDED WITH TEMPORARY RYE GRASS.
8. INSTALL UNDERGROUND UTILITIES, MANHOLES AND CATCH BASINS. GRATES OF CURB AND FIELD INLETS SHOULD BE LEFT AT ELEVATIONS WHICH PERMIT PROPER COLLECTION OF SURFACE RUNOFF.
9. INSTALL INLET PROTECTION AT CURB AND FIELD INLETS.
10. CONSTRUCT CURBS AND INSTALL BASE AND BINDER COURSES OF PAVED AREAS. RAISE GRATES OF THE CURB AND FIELD INLETS ACCORDINGLY.
11. COMPLETE THE GRADING.
12. INSTALL SURFACE COURSE OF PAVEMENT. RAISE GRATES OF CURBS AND FIELD INLETS TO FINAL ELEVATION.
13. UPON COMPLETION OF CONSTRUCTION ALL DISTURBED AREAS ARE TO BE SEEDED WITH 1/2 LB. OF RYE GRASS PER 1,000 SQUARE FEET OF DISTURBED AREA. ALL TEMPORARY DEVICES SHALL BE REMOVED AND THE AFFECTED AREAS REGRADED, PLANTED OR TREATED IN ACCORDANCE WITH THE APPROVED SITE PLANS.
14. FOR INDIVIDUAL HOUSE & SEPTIC CONSTRUCTION FOLLOW STEPS #1 TO #13 WHERE APPLICABLE.
15. BARE SOIL SHOULD BE SEEDED WITHIN 14 DAYS OF EXPOSURE; WHENEVER CONSTRUCTION IS SUSPENDED OR COMPLETED, AREAS SHOULD BE SEEDED DOWN OR MULCHED IMMEDIATELY. UPON COMPLETION, A PERENNIAL MIX NEEDS TO BE USED TO ENSURE CONTINUAL STABILIZATION.

STANDARD EROSION CONTROL NOTES

AN EROSION CONTROL SYSTEM WILL BE UTILIZED BY THE DEVELOPER TO MINIMIZE THE PRODUCTION OF SEDIMENT FROM THE SITE. METHODS TO BE UTILIZED WILL BE THOSE FOUND MOST EFFECTIVE FOR THE SITE AND SHALL INCLUDE ONE OR MORE OF THE FOLLOWING, AS APPLICABLE:

1. TEMPORARY SEDIMENTATION ENTRAPMENT AREAS SHALL BE PROVIDED AT KEY LOCATIONS TO INTERCEPT AND CLARIFY SILT LADEN RUNOFF FROM THE SITE. THESE MAY BE EXCAVATED OR MAY BE CREATED UTILIZING EARTHEN BERMS, RIP-RAP, CRUSHED STONE DAMS, OR OTHER SUITABLE MATERIALS. DIVERSION SWALES, BERMS, OR OTHER CHANNELIZATION SHALL BE CONSTRUCTED TO INSURE THAT ALL SILT LADEN WATERS ARE DIRECTED INTO THE ENTRAPMENT AREAS, WHICH SHALL BE CLEANED PERIODICALLY DURING THE COURSE OF CONSTRUCTION. THE COLLECTED SILT SHALL BE DEPOSITED IN AREAS SAFE FROM FURTHER EROSION.
2. ALL DISTURBED AREAS, EXCEPT ROADWAYS, WHICH WILL REMAIN UNFINISHED FOR MORE THAN 14 DAYS SHALL BE TEMPORARILY SEEDED WITH 1/2 LB. OF RYE GRASS OR MULCHED WITH 100 LBS. OF STRAW OR HAY PER 1,000 SQUARE FEET. ROADWAYS SHALL BE STABILIZED AS RAPIDLY AS PRACTICAL BY INSTALLATION OF THE BASE COURSE.
3. SILT THAT LEAVES THE SITE IN SPITE OF THE REQUIRED PRECAUTIONS SHALL BE COLLECTED AND REMOVED AS DIRECTED BY APPROPRIATE MUNICIPAL AUTHORITIES.
4. AT THE COMPLETION OF THE PROJECT, ALL TEMPORARY SILTATION DEVICES SHALL BE REMOVED AND THE AFFECTED AREAS REGRADED, PLANTED OR TREATED IN ACCORDANCE WITH THE APPROVED SITE PLANS.
5. PROVIDE INLET PROTECTION TO ALL INLETS ON SITE. (SEE DETAIL)

ALL UTILITIES ARE SHOWN IN AN APPROXIMATE WAY FROM AVAILABLE INFORMATION. THE CONTRACTOR SHALL CALL THE LOCAL UNDERGROUND FACILITIES PROTECTIVE ORGANIZATION TO HAVE ALL UNDERGROUND UTILITIES MARKED IN THE FIELD PRIOR TO ANY CLEARING OR ANY CONSTRUCTION. THE CONTRACTOR SHALL ALSO VERIFY THE LOCATION, SIZE AND INVERT OF ALL UTILITIES PRIOR TO ANY CONSTRUCTION. ANY UTILITY FOR WHICH NO EVIDENCE CAN BE SEEN ON THE SURFACE OF THE LANDS MAY NOT BE SHOWN ON THIS DRAWING.

16 NYCRR PART 753
REQUIRES 2 WORKING DAYS NOTICE PRIOR TO START OF ANY UNDERGROUND WORK
DIG SAFELY NEW YORK
WWW.DIGSAFELYNEWYORK.COM
1-800-962-7962

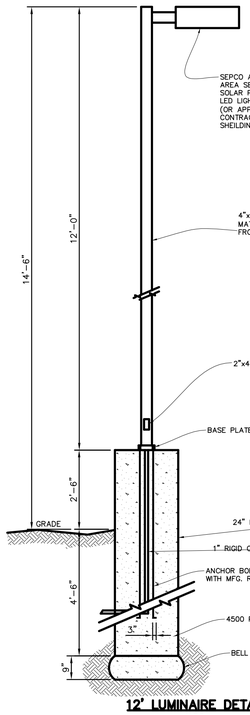

12' LUMINAIRE DETAIL

N.T.S.

NOTE: LIGHT HEADS SHALL BE ADJUSTED AND CUT-OFFS INSTALLED TO PREVENT LIGHT FROM PROJECTING ON TO NEIGHBORING PROPERTIES AND R.O.W.

TYPICAL ISOLUX

N.T.S.

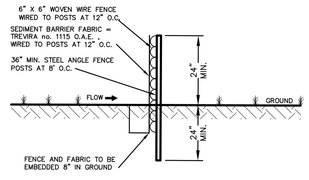

NOTES:

1. THIS FENCE IS AN ALTERNATE TO HAY BALE SEDIMENT BARRIER
2. MAINTAIN FENCE TO INSURE SEDIMENT ENTRAPMENT QUALITIES DURING CONSTRUCTION.
3. REMOVE EXCESS SILT PERIODICALLY AND WHEN BULGES DEVELOPE.
4. FENCE SYMBOL ON PLAN =

SEDIMENT BARRIER FENCE

N.T.S.

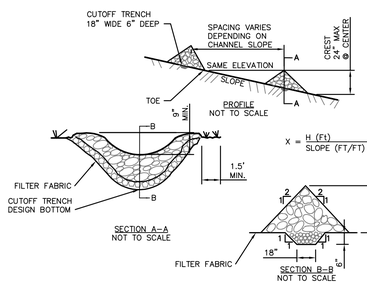

CONSTRUCTION SPECIFICATIONS

1. STONE WILL BE PLACED ON A FILTER FABRIC FOUNDATION TO THE LINES, GRADES AND LOCATIONS SHOWN IN THE PLAN.
2. SET SPACING OF CHECK DAMS TO ASSUME THAT THE ELEVATIONS OF THE CREST OF THE DOWNSTREAM DAM IS AT THE SAME ELEVATION OF THE TOE OF THE UPSTREAM DAM.
3. EXTEND THE STONE A MINIMUM OF 1.5 FEET BEYOND THE DITCH BANKS TO PREVENT CUTTING AROUND THE DAM.
4. PROTECT THE CHANNEL DOWNSTREAM OF THE LOWEST CHECK DAM FROM SCOUR AND EROSION WITH STONE OR LINER AS APPROPRIATE.
5. ENSURE THAT CHANNEL APPURTENANCES SUCH AS CULVERT ENTRANCES BELOW CHECK DAMS ARE NOT SUBJECT TO DAMAGE OR BLOCKAGE FROM DISPLACED STONE.
6. MAXIMUM DRAINAGE AREA 2 ACRES.
7. SYMBOL:

CHECK DAM

N.T.S.

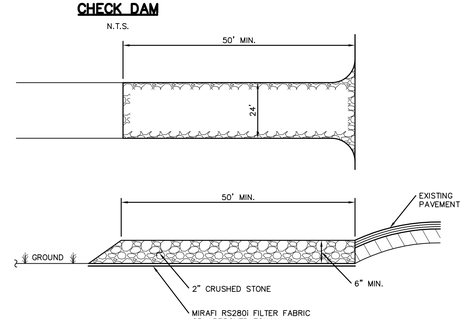

NOTES:

1. ENTRANCE SHALL BE MAINTAINED AS CONDITIONS DEMAND TO PREVENT TRACKING OF SEDIMENT ONTO PUBLIC ROADS.

STABILIZED CONSTRUCTION ENTRANCE

N.T.S.

MINIMUM AREA CALCULATIONS:
NOT MORE THAN 25% OF ANY LAND WITHIN UTILITY EASEMENTS OR OTHER EASEMENTS, OR WITH UNEXCAVATED SLOPES OVER 25% SHALL BE COUNTED TOWARD THE MINIMUM LOT AREA

TOTAL SITE AREA ..... 13.047 ACRES
(568,327 SF.)

LESS STEEP SLOPES AREAS
SLOPES >25% = 25,635 SF. = 0.5885 AC.
MINUS 75% OF SLOPES >25%
0.75 X 0.5885 ..... 0.4414 AC.

LESS 75% OF EASEMENT AREAS
WATER EASEMENT = 4,530 SF. = 0.0994 AC.
MINUS 75% WATER EASEMENT
0.75 X 0.0994 ..... 0.0746 AC.
SIGHT EASEMENT = 12,545 SF. = 0.2834 AC.
MINUS 75% SIGHT EASEMENT
0.75 X 0.2834 ..... 0.2125 AC.

TOTAL AREA OF DEDUCTIONS..... 0.7285 ACRES

13.047 AC. - 0.7285 AC. = 12.3181 AC.
TOTAL NET AREA ..... 12.3181 ACRES
(536,577 SF.)

BUILDING COVERAGE RATIO CALCULATIONS:
BLDG. COVER. / ZONING AREA = RATIO
EXISTING
20,979 SF. / 536,577 SF. = 0.0391 (0.04)
PROPOSED
37,071 SF. / 536,577 SF. = 0.0691 (0.07)

IMPERVIOUS SURFACE RATIO CALCULATIONS:
IMPERVIOUS / ZONING AREA = RATIO
EXISTING
108,909 SF. / 536,577 SF. = 0.2030 (0.21)
PROPOSED
128,203 SF. / 536,577 SF. = 0.2387 (0.24)

FRONT YARD IMP. SURFACE RATIO CALCULATIONS:
F.Y. IMP. / F.Y. AREA = RATIO
EXISTING
28,288 SF. / 207,715 SF. = 0.1362 (0.14)
PROPOSED
3,232 SF. / 62,852 SF. = 0.0514 (0.06)

PARKING COUNT:
EXISTING
55 SPACES AT SCHOOL
4 SPACES AT CARETAKER'S RESIDENCE
6 SPACES AT DORMITORY
63 PERMANENT SPACES

31 OVERFLOW SPACES AT SCHOOL

94 TOTAL EXISTING PARKING SPACES

PROPOSED
51 SPACES AT SCHOOL
19 SPACES AT DORMITORY & CARETAKER'S RESIDENCE
24 SPACES AT FACULTY HOUSING
94 PROPOSED SPACES

EXISTING SPACES LOST
6 SPACES AT DORMITORY
4 SPACES AT CARETAKER'S RESIDENCE
10 SPACES LOST

94 PROP. SPACES + 94 TOT. EX. SPACES - 10 LOST SPACE= 178 SPACES

STEVEN M. SPARACO, PE
18 NORTH MAIN STREET
HARRIMAN, NEW YORK 10926
(845) 782-8543

STATE OF NEW YORK · STEVEN MICHAEL SPARACO · 079513 · LICENSED PROFESSIONAL ENGINEER

BULK TABLE

ZONE: R-50	MINIMUM LOT AREA	LOT FRONTAGE (FEET)	LOT WIDTH (FEET)	EFFECTIVE SQUARE (FEET)	FRONT YARD (FEET)	SIDE YARD (FEET)	TOTAL SIDE YARD	REAR YARD (FEET)	MAXIMUM IMPERVIOUS SURFACE	FRONT YARD IMPERVIOUS SURFACE	MAXIMUM BUILDING COVERAGE	BUILDING HEIGHT STORIES	MAXIMUM BUILDING HEIGHT	MAXIMUM EXPOSED BLDG. HGT.	OFF-STREET PARKING
REQUIRED	50,000 SF.	100	150	150	50	30	75	50	0.20	0.15	0.10	2.5	25	40	91
EXISTING	536,577 SF.	1,148	1,108	150	192.7	80	161.7	432.8	0.21***	0.14	0.04	2.5	39.7*	39.7	94
PROPOSED	536,577 SF.	1,148	1,108	150	55	80	161.7	432.8	0.24	0.06	0.07	2.5	39.7*	39.7	178**
VARIANCE REQUIRED									YES						

*VARIANCE GRANTED JUNE 20, 2000 BLDG HGT 39.7' FOR EAST END OF DORMITORY
**INCLUDING 31 SPACES FOR OVERFLOW (22 IN ISLAND AND 9 ON STONE)
*** EXISTING NON-CONFORMING

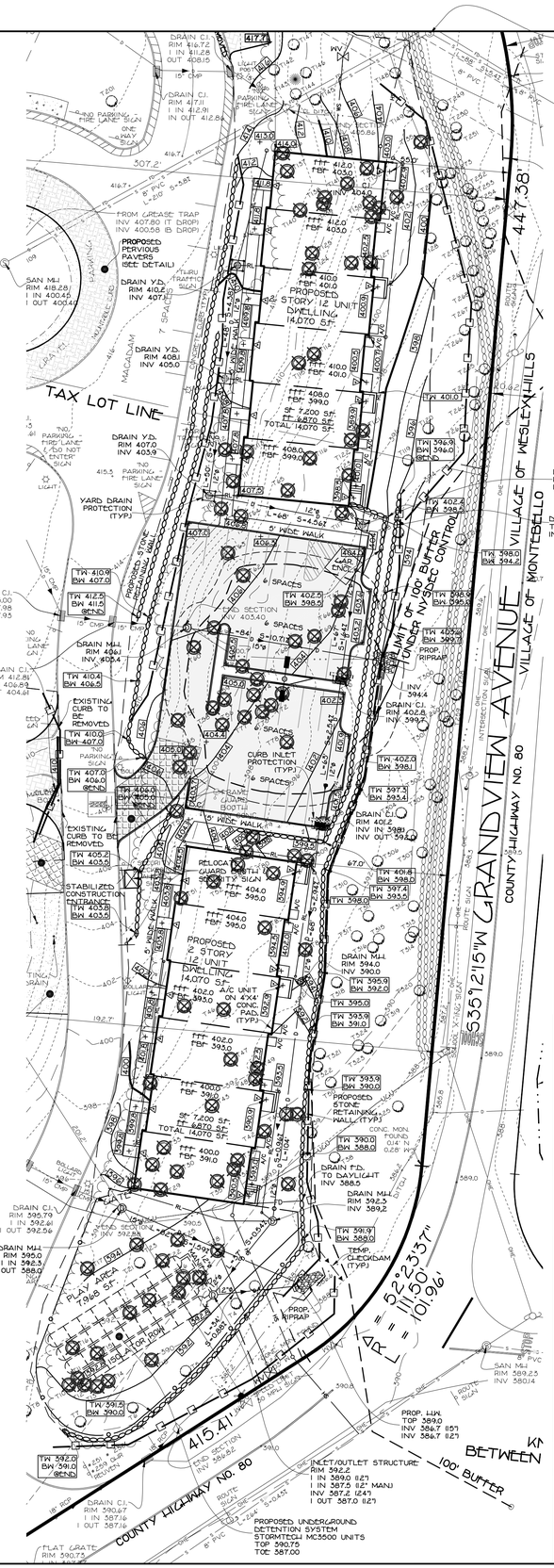

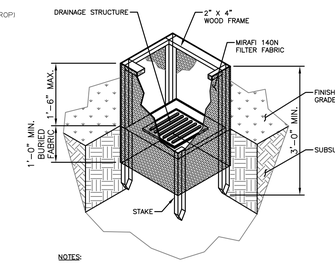

NOTES:

1. FILTER FABRIC SHALL HAVE AN EOS OF 40-85. BURLAP MAY BE USED FOR SHORT TERM APPLICATIONS.
2. CUT FABRIC FROM A CONTINUOUS ROLL TO ELIMINATE JOINTS. IF JOINTS ARE NEEDED THEY WILL BE OVERLAPPED TO THE NEXT STAKE.
3. STAKE MATERIALS WILL BE STANDARD 2" X 4" WOOD OR EQUIVALENT. METAL WITH A MINIMUM LENGTH OF 3 FEET.
4. SPACE STAKES EVENLY AROUND INLET 3 FEET APART AND DRIVE A MINIMUM 18 INCHES DEEP. SPANS GREATER THAN 3 FEET MAY BE BRIDGED WITH THE USE OF WIRE MESH BEHIND THE FILTER FABRIC FOR SUPPORT.
5. FABRIC SHALL BE EMBEDDED 1 FOOT MINIMUM BELOW GROUND AND BACKFILLED. IT SHALL BE SECURELY FASTENED TO THE STAKES AND FRAME.
6. A 2" x 4" WOOD FRAME SHALL BE COMPLETED AROUND THE CREST OF THE FABRIC FOR OVER FLOW STABILITY.
7. SYMBOL:

FIELD INLET PROTECTION DETAIL

N.T.S.

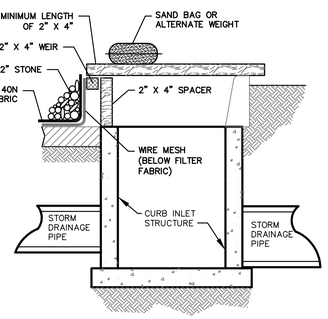

NOTES:

1. FILTER FABRIC SHALL HAVE AN EOS OF 40-85.
2. WOODEN FRAME SHALL BE CONSTRUCTED OF 2" X 4" CONSTRUCTION GRADE LUMBER.
3. WIRE MESH ACROSS THROAT SHALL BE A CONTINUOUS PIECE 30 INCH MINIMUM WIDTH WITH A LENGTH 4 FEET LONGER THAN THE THROAT. IT SHALL BE SHAPED AND SECURELY NAILED TO A 2" X 4" WEIR.
4. THE WEIR SHALL BE SECURELY NAILED TO 2" X 4" SPACERS 9 INCHES LONG SPACED NO MORE THAN 6 FEET APART.
5. THE ASSEMBLY SHALL BE PLACED AGAINST THE INLET AND SECURED BY 2" X 4" ANCHORS 2 FEET LONG EXTENDING ACROSS THE TOP OF THE INLET AND HELD IN PLACE BY SAND BAGS OR ALTERNATE WEIGHTS.
6. SYMBOL

CURB INLET PROTECTION DETAIL

N.T.S.

REVISIONS

1. REV: UPDATED BULK TABLES-10/16/23
2. REV: WALK OUT BASEMENTS, GRADING, DRAINAGE, WALLS-1/9/25

PART PLAN (STAFF HOUSING) & EROSION CONTROL
FOR
YESHIVAS OHR REUVEN
LOCATED IN
VILLAGE OF WESLEY HILLS
TOWN OF RAMAPO
ROCKLAND COUNTY, NEW YORK

GRAPHIC SCALE
20 10 0 20 40 60

SPARACO & YOUNGBLOOD, PLLC
CIVIL ENGINEERING * LAND SURVEYING
SITE PLANNING
18 NORTH MAIN STREET
P.O. BOX 818
HARRIMAN, N.Y. 10926
TEL: (845) 782-8543
FAX: (845) 782-5901
SPARACO.STEVE@SELSNY.COM WDYLS1@GMAIL.COM

FILE	SP-4601
DATE	JUNE 3, 2021
SCALE	1" = 50'
DWG #	4 OF 8

SP-4601

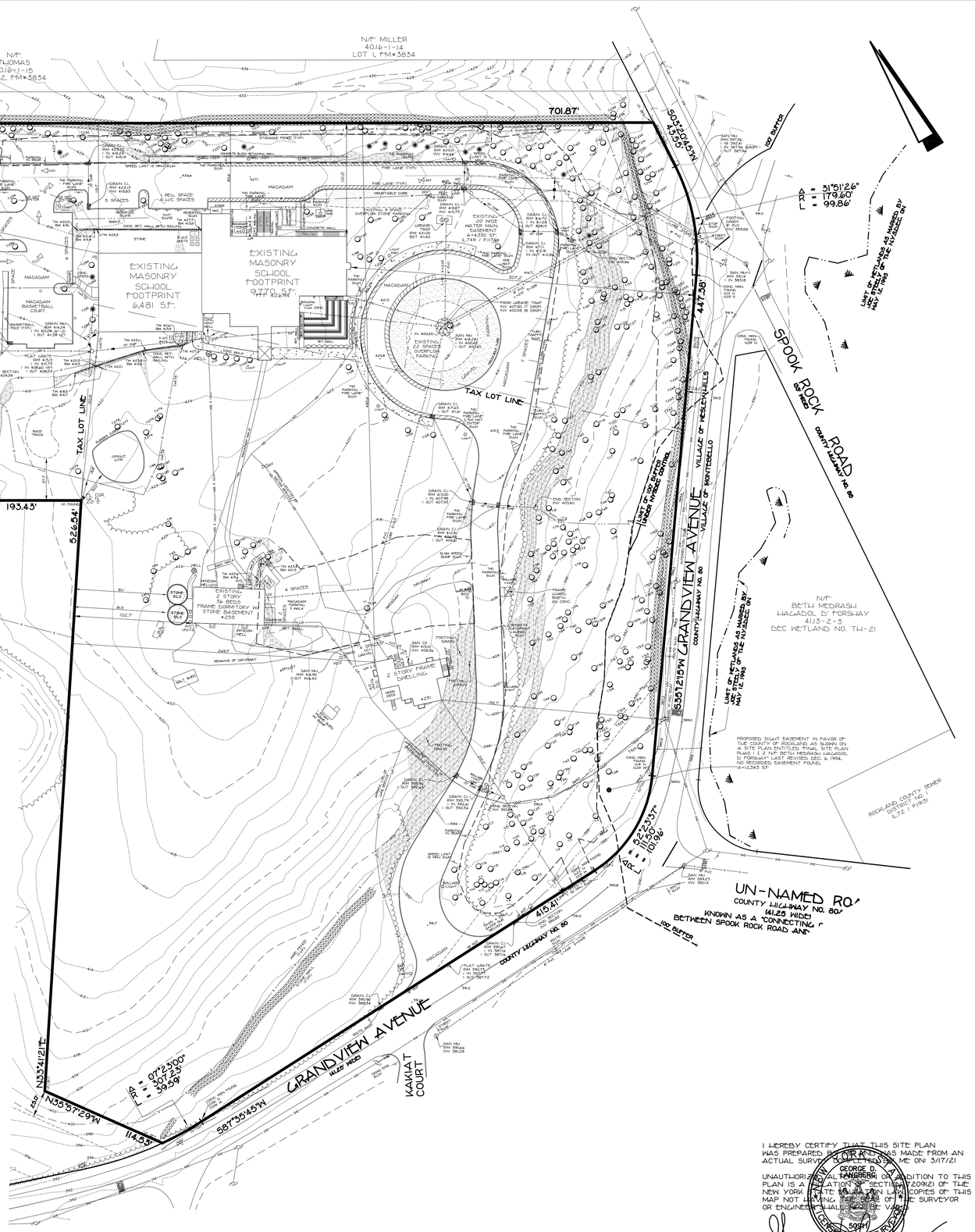

TAX LOT: SECTION 40.16, BLOCK 1, LOTS 17 & 18

MAP REFERENCE:
BEING A CERTAIN MAP ENTITLED "SUBDIVISION PLAT-KAKIAT FARMS ASSOCIATES" FILED IN THE ROCKLAND COUNTY CLERK'S OFFICE ON 9/28/88 AS MAP#6251.

BEING A CERTAIN MAP ENTITLED "FINAL SUBDIVISION OF WESLEY ESTATES" FILED IN THE ROCKLAND COUNTY CLERK'S OFFICE ON 5/11/84 AS MAP#5608.

BEING A CERTAIN MAP ENTITLED "SUBDIVISION FOR POUSTY" FILED IN THE ROCKLAND COUNTY CLERK'S OFFICE ON 8/22/83 AS MAP#5528.

BEING A CERTAIN MAP ENTITLED "MINOR SUBDIVISION FOR RICHARD STEFFENS" FILED IN THE ROCKLAND COUNTY CLERK'S OFFICE ON 3/10/69 AS MAP#3834.

DEED REFERENCE:
L. 657 / P. 134
L. 687 / P. 212
L. 592 / P. 1083

SLOPES

	RANGE	AREA (S.F.)
	25%-100%	25,635

TREE LIST

NO.	DIA.	SPECIES
T1	8"	LOCUST
T2	10"	LOCUST
T3	10"	LOCUST
T4	8"	LOCUST
T5	10"	LOCUST
T6	8"	OAK
T7	26"	LOCUST
T8	26"	ASH
T9	24"	WALNUT
T10	26"	LOCUST
T11	16"	MAPLE
T12	24"	LOCUST
T13	24"	LOCUST
T14	16"	LOCUST
T15	30"	LOCUST
T16	10"	ASH
T17	16"	WALNUT
T18	10"	ELM
T19	10"	WALNUT
T20	16"	LOCUST
T21	10"	LOCUST
T22	12"	LOCUST TWIN
T23	12"	AILANTHUS TWIN
T24	20"	ASH
T25	20"	ASH
T26	14"	MAPLE
T27	16"	MAPLE
T28	20"	MAPLE
T29	16"	ASH
T30	16"	ASH
T31	20"	ASH
T32	10"	WALNUT
T33	10"	MAPLE
T34	12"	MAPLE
T35	20"	MAPLE
T36	16"	LOCUST
T37	12"	LOCUST
T38	10"	ELM
T39	8"	LOCUST
T40	14"	LOCUST
T41	16"	MAPLE
T42	8"	HEMLOCK
T43	14"	MAPLE
T44	18"	WILLOW
T45	14"	POPLAR
T46	26"	WALNUT
T47	14"	ASH TWIN
T48	20"	ASH
T49	18"	ASH
T50	12"	MAPLE
T51	16"	OAK
T52	20"	MAPLE
T53	20"	OAK
T54	10"	HEMLOCK
T55	30"	LOCUST TWIN
T56	16"	LOCUS
T57	16"	MAPLE
T58	18"	CHERRY
T59	10"	LOCUST
T60	16"	LOCUST
T61	12"	MAPLE
T62	12"	CHERRY
T63	24"	LOCUST
T64	18"	LOCUST
T65	12"	LOCUST
T66	16"	LOCUST
T67	12"	LOCUST
T68	8"	LOCUST
T69	18"	LOCUST
T70	30"	LOCUST
T71	16"	ELM TWIN
T72	16"	24"
T73	8"	CHERRY
T74	16"	LOCUST
T75	18"	LOCUST
T76	12"	LOCUST
T77	16"	LOCUST
T78	30"	LOCUST
T79	12"	CHERRY
T80	12"	CHERRY
T81	12"	ASH
T82	16"	ASH
T83	8"	CHERRY
T84	14"	CHERRY
T85	10"	LOCUS
T86	16"	LOCUST TRIPLE
T87	20"	ASH
T88	18"	CHERRY
T89	16"	CHERRY
T90	14"	MAPLE
T91	16"	ELM
T92	60"	WALNUT
T93	48"	WALNUT
T94	30"	CHESTNUT
T95	12"	TULIP
T96	40"	CHESTNUT
T97	18"	MAPLE
T98	8"	CHERRY
T99	16"	CHERRY
T100	12"	ASH
T101	2"	BIRCH TRIPLE
T102	2"	BIRCH TRIPLE
T103	2"	BIRCH TRIPLE
T104	2"	BIRCH TRIPLE
T105	6"	CRABTREE TRIPLE
T106	6"	CRABTREE TRIPLE
T107	6"	CRABTREE
T108	8"	CRABTREE
T109	14"	BASSWOOD

TREE LIST

NO.	DIA.	SPECIES
T110	18"	LOCUST
T111	18"	LOCUST
T112	18"	LOCUST
T113	18"	LOCUST
T114	10"	MAPLE
T115	18"	LOCUST
T116	16"	LOCUST
T117	16"	LOCUST
T118	16"	ASH
T119	10"	ASH
T120	8"	CHERRY
T121	14"	LOCUST
T122	16"	LOCUST
T123	20"	LOCUST
T124	20"	LOCUST
T125	8"	MAPLE
T126	16"	LOCUST TRIPLE
T127	16"	LOCUST
T128	8"	CHERRY
T129	12"	LOCUST
T130	24"	LOCUST
T131	12"	LOCUST
T132	20"	LOCUST
T133	8"	LOCUST
T134	12"	MAPLE
T135	16"	MAPLE
T136	12"	LOCUST
T137	16"	LOCUST
T138	16"	ELM
T139	18"	LOCUST TWIN
T140	12"	LOCUST
T141	16"	LOCUST
T142	12"	LOCUST TWIN
T143	12"	PINE
T144	10"	POPLAR
T145	10"	POPLAR
T146	8"	LOCUST
T147	26"	LOCUST
T148	8"	ELM
T149	10"	HICKORY
T150	8"	LOCUST
T151	10"	LOCUST
T152	10"	LOCUST
T153	8"	POPLAR
T154	8"	LOCUST
T155	10"	LOCUST
T156	10"	MAPLE
T157	10"	PINE
T158	8"	CHERRY
T159	30"	ASH TWIN
T160	10"	SASSAFRASS
T161	24"	HICKORY
T162	12"	OAK
T163	8"	LOCUST
T164	24"	LOCUST
T165	8"	CHERRY
T166	8"	SASSAFRASS
T167	10"	LOCUST TWIN
T168	16"	LOCUST
T169	18"	LOCUST
T170	10"	SASSAFRASS TWIN
T171	10"	LOCUST
T172	10"	LOCUST
T173	10"	MAPLE
T174	8"	LOCUST TRIPLE
T175	12"	LOCUST
T176	10"	PINE
T177	20"	PINE
T178	12"	LOCUST TWIN
T179	18"	SASSAFRASS
T180	24"	SASSAFRASS
T181	12"	PINE
T182	8"	PINE TWIN
T183	20"	LOCUST
T184	14"	PINE
T185	12"	PINE
T186	12"	LOCUST
T187	12"	SASSAFRASS
T188	16"	SASSAFRASS
T189	12"	SASSAFRASS
T190	12"	SASSAFRASS
T191	16"	SASSAFRASS
T192	16"	SASSAFRASS
T193	14"	MAPLE
T194	8"	BASSWOOD
T195	8"	BASSWOOD
T196	8"	BASSWOOD
T197	4"	PLUM
T198	4"	PLUM
T199	4"	PLUM
T200	6"	PLUM
T201	8"	CRABTREE
T202	8"	MAPLE
T203	24"	LOCUST
T204	14"	ASH
T205	16"	LOCUST
T206	20"	LOCUST
T207	24"	WALNUT
T208	10"	PINE
T209	10"	ASH TWIN
T210	36"	MAPLE TRIPLE
T211	16"	MAPLE
T212	18"	ASH
T213	18"	LOCUST
T214	24"	LOCUST
T215	12"	WALNUT
T216	8"	PINE
T217	10"	PINE
T218	14"	PINE

TREE LIST

NO.	DIA.	SPECIES
T219	14"	PINE
T220	12"	PINE
T221	18"	LOCUST
T222	16"	BIRCH
T223	10"	SASSAFRASS
T224	14"	ASH
T225	12"	ELM
T226	8"	ELM
T227	14"	LOCUST
T228	60"	OAK
T229	16"	ELM
T230	14"	LOCUST
T231	30"	ASH TWIN
T232	40"	LOCUST
T233	8"	MAPLE
T234	10"	OAK
T235	8"	OAK
T236	18"	OAK
T237	10"	LOCUST
T238	12"	MAPLE
T239	12"	ASH
T240	8"	CHESTNUT
T241	12"	ASH
T242	16"	ASH
T243	18"	ASH
T244	24"	ASH
T245	12"	MAPLE
T246	12"	ASH QUAD
T247	10"	ELM
T248	14"	LOCUST
T249	14"	HICKORY
T250	24"	ASH
T251	20"	ASH
T252	8"	HICKORY
T253	14"	ASH
T254	30"	WALNUT
T255	20"	SASSAFRASS
T256	36"	ASH
T257	8"	HICKORY
T258	30"	WALNUT
T259	8"	ELM
T260	10"	ASH
T261	50"	WALNUT
T262	10"	OAK
T263	18"	HICKORY TRIPLE
T264	14"	WALNUT
T265	30"	SASSAFRASS
T266	12"	MAPLE
T267	12"	WALNUT
T268	24"	SASSAFRASS
T269	30"	SASSAFRASS
T270	30"	SASSAFRASS
T271	12"	SASSAFRASS
T272	36"	CHERRY
T273	36"	ASH
T274	24"	LOCUST
T275	24"	LOCUST
T276	14"	LOCUST
T277	14"	LOCUST TWIN
T278	14"	LOCUST TWIN
T279	16"	PINE
T280	6"	MAPLE
T281	6"	SPRUCE
T282	6"	MAPLE
T283	6"	SPRUCE
T284	6"	MAPLE
T285	8"	OAK
T286	4"	OAK
T287	24"	OAK
T288	10"	PINE
T289	10"	ELM TWIN
T290	24"	OAK
T291	24"	HICKORY
T292	20"	CHESTNUT
T293	24"	HICKORY TWIN
T294	12"	HICKORY
T295	24"	HICKORY
T296	36"	HICKORY
T297	20"	OAK
T298	30"	ASH
T299	24"	ELM
T300	30"	WALNUT
T301	10"	ASH
T302	36"	ASH TRIPLE
T303	8"	LOCUST
T304	10"	CHESTNUT
T305	14"	ASH
T306	10"	ELM
T307	30"	WALNUT TWIN
T308	20"	LOCUST
T309	26"	TULIP
T310	12"	CHERRY
T311	10"	OAK
T312	40"	LOCUST
T313	8"	CHERRY
T314	24"	ASH
T315	8"	CHERRY
T316	12"	CHERRY
T317	10"	LOCUST
T318	10"	MAPLE
T319	8"	POPLAR
T320	8"	CHERRY
T321	20"	CHERRY
T322	8"	MAPLE
T323	16"	TULIP
T324	12"	LOCUST
T325	10"	ELM

REVISIONS

1. REV: UPDATED BULK TABLES-10/16/23
2. REV: WALK OUT BASEMENTS, GRADING, DRAINAGE WALLS-11/9/23

I HEREBY CERTIFY THAT THIS SITE PLAN WAS PREPARED BY ME AND WAS MADE FROM AN ACTUAL SURVEY COMPLETED BY ME ON: 3/17/21

UNAUTHORIZED ALTERATION OR ADDITION TO THIS PLAN IS A VIOLATION OF SECTION 7209(2) OF THE NEW YORK STATE EDUCATION LAW. COPIES OF THIS MAP NOT BEARING THE SEAL OF THE SURVEYOR OR ENGINEER ARE UNAUTHORIZED.

GEORGE D. LANGBERG
LICENSED LAND SURVEYOR
50911

George D. Langberg

GEORGE D. LANGBERG, PLS #050911 ©

EXISTING CONDITIONS
FOR
YESHIVAS OHR REUVEN
LOCATED IN
VILLAGE OF WESLEY HILLS
TOWN OF RAMAPO
ROCKLAND COUNTY, NEW YORK

GRAPHIC SCALE
20 10 0 20 40 60

SPARACO & YOUNGBLOOD, PLLC
CIVIL ENGINEERING * LAND SURVEYING
SITE PLANNING
18 NORTH MAIN STREET
P.O. BOX 818
HARRIMAN, N.Y. 10926
TEL: (845) 782-8543
FAX: (845) 782-5901
SPARACO.STEVE@SELSNY.COM WDYLS1@GMAIL.COM

FILE #	SP-4601
DATE	JUNE 3, 2021
SCALE	1" = 50'
DWG #	5 OF 8

ALL UTILITIES ARE SHOWN IN AN APPROXIMATE WAY FROM AVAILABLE INFORMATION. THE CONTRACTOR SHALL CALL THE LOCAL UNDERGROUND FACILITIES PROTECTIVE ORGANIZATION TO HAVE ALL UNDERGROUND UTILITIES MARKED IN THE FIELD PRIOR TO ANY CLEARING OR ANY CONSTRUCTION. THE CONTRACTOR SHALL ALSO VERIFY THE LOCATION, SIZE AND INVERT OF ALL UTILITIES PRIOR TO ANY CONSTRUCTION. ANY UTILITY FOR WHICH NO EVIDENCE CAN BE SEEN ON THE SURFACE OF THE LANDS MAY NOT BE SHOWN ON THIS DRAWING.

16 NYCRR PART 753
REQUIRES 2 WORKING DAYS NOTICE PRIOR TO START OF ANY UNDERGROUND WORK
DIG SAFELY NEW YORK
WWW.DIGSAFELYNEWYORK.COM
1-800-962-7962

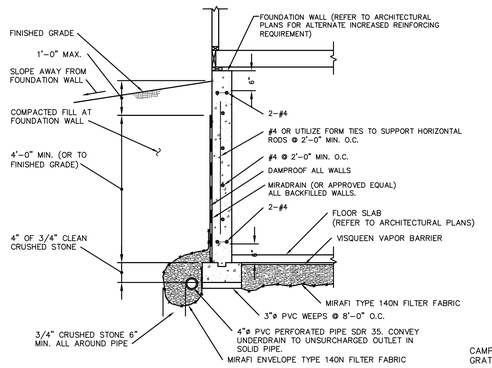

NOTES:

1. CONVEY ALL ROOF LEADERS AWAY FROM DWELLING IN SEPARATE AND INDEPENDENT 4"ø (MINIMUM) SDR 35 PVC PIPE.
2. NO CONNECTIONS TO UNDERDRAIN SYSTEM FROM OTHER SOURCES ARE PERMITTED.
3. BACKFILLING OF WALL IS NOT PERMITTED UNTIL FRAMING IS COMPLETED OR WALL IS SUPPORTED INSIDE.
4. STEEL REINFORCEMENT SHOWN IS MINIMUM REQUIREMENT. SEE ARCHITECTURAL PLANS FOR ALTERNATE INCREASED REINFORCING REQUIREMENT.

FOUNDATION UNDERDRAIN DETAIL

N.T.S.

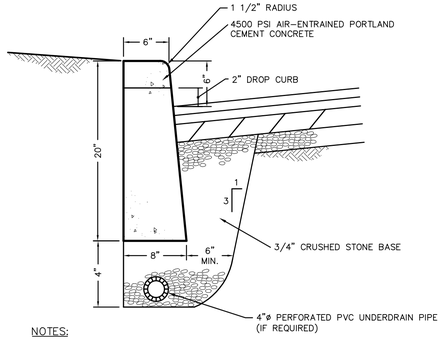

NOTES:

1. CURB SHALL BE CAST IN PLACE.
2. EXPANSION JOINTS OF 3/16" CELLULOSE OR SIMILAR MATERIAL SHALL BE PLACED AT TEN FOOT INTERVALS, TO FULL DEPTH OF CURB.
3. UNDERDRAIN MAY BE ELIMINATED IN PARKING LOTS AND OTHER NON-PUBLIC FACILITIES.

CURB DETAIL: CONCRETE

N.T.S.

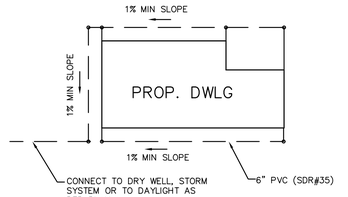

NOTES:

1. CONNECT ALL ROOF LEADERS TO 6" PVC SEE ARCHITECT PLAN FOR LEADER LOCATIONS

TYPICAL ROOF DRAIN SCHEMATIC

N.T.S.

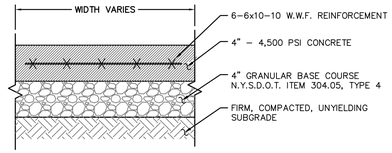

NOTES:

1. BROOM FINISH EACH SQUARE AT 90' TO PRECEDING SQUARE.
2. PLACE JOINTS EQUAL TO WALK WIDTH OR AS SHOWN ON PLAN.
3. INSTALL 1/2" PRE-MOLDED EXPANSION JOINT FILLER AT 24' O.C. MAX. AND AGAINST CONCRETE CURBS, BUILDINGS AND OTHER STRUCTURES.

CONCRETE SIDEWALK DETAIL

N.T.S.

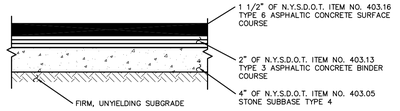

NOTES:

THIS SECTION TO BE UTILIZED AT PARKING LOTS FOR PASSENGER CAR PARKING AND AISLES ONLY. NOT FOR USE AT ROADS, DRIVEWAYS OR LOADING ZONES.

PAVEMENT SECTION: PARKING LOT

N.T.S.

CAMPBELL FOUNDRY GRATE NUMBER 1379

GRATE – PLAN VIEW

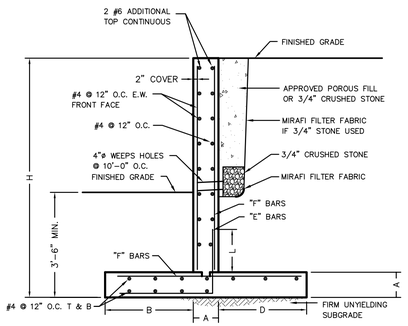

H	B	D	'E'-BARS	'F'-BARS	A	L
5'-0"	1'-2"	0'-6"	#4 @ 12" O.C.	#6 @ 12" O.C.	1'-0"	1'-6"
6'-0"	1'-5"	0'-8"	#4 @ 12" O.C.	#4 @ 12" O.C.	1'-0"	1'-6"
7'-0"	1'-8"	1'-0"	#5 @ 12" O.C.	#4 @ 12" O.C.	1'-0"	2'-0"
8'-0"	2'-0"	1'-0"	#5 @ 12" O.C.	#4 @ 12" O.C.	1'-0"	2'-0"
9'-0"	2'-4"	1'-0"	#6 @ 12" O.C.	#4 @ 12" O.C.	1'-0"	2'-6"
10'-0"	2'-6"	1'-2"	#6 @ 10" O.C.	#4 @ 10" O.C.	1'-0"	2'-6"
11'-0"	3'-0"	1'-6"	#8 @ 12" O.C.	#5 @ 12" O.C.	1'-0"	2'-6"
12'-0"	3'-0"	1'-8"	#8 @ 10" O.C.	#5 @ 10" O.C.	1'-0"	3'-0"
13'-0"	3'-6"	2'-0"	#8 @ 7" O.C.	#5 @ 7" O.C.	1'-0"	3'-0"
14'-0"	3'-6"	2'-4"	#9 @ 7 O.C.	#5 @ 7" O.C.	1'-0"	3'-0"
16'-0"	4'-0"	2'-6"	#9 @ 6" O.C.	#5 @ 6" O.C.	1'-6"	5'-0"
18'-0"	4'-6"	2'-8"	#9 @ 6" O.C.	#5 @ 6" O.C.	1'-6"	5'-0"

TYPICAL CONCRETE RETAINING WALL

N.T.S.

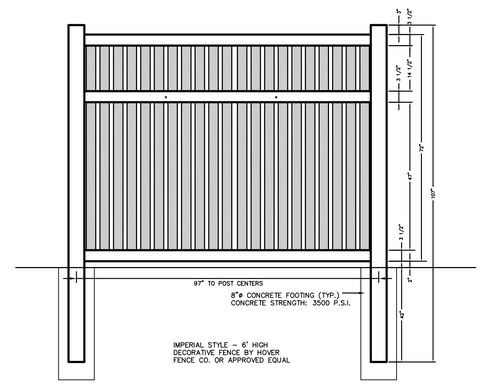

6' DECORATIVE VINYL FENCE

N.T.S.

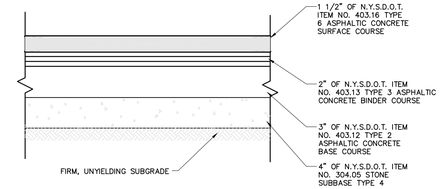

PAVEMENT SECTION: ROAD

N.T.S.

PERMEABLE INTERLOCKING PAVERS MAINTENCE SCHEDULE

- KEEP RECORD OF ALL INSPECTIONS AND MAINTENANCE ACTIVITIES – ANNUALLY
- KEEP RECORDS OF ALL COST FOR INSPECTION,

MAINTENANCE AND REPAIRS – ANNUALLY

- ENSURE THAT PAVEMENT DEWATERS BETWEEN STORMS – MONTHLY & AFTER STORMS >0.5"
- VACUUM, SWEEP FREQUENTLY TO KEEP SURFACE FREE OF SEDIMENTS – 3 TO 4 TIMES

PER YEAR

- INSPECT THE SURFACE FOR DETERIORATION OR

SPALLING – ANNUALLY

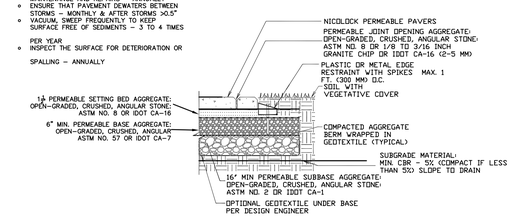

NICOLOCK PERMEABLE INTERLOCKING PAVERS (OR APPROVED EQUAL) CONCRETE PAVEMENT DETAIL

PERVIOUS PAVERS WITHOUT CURB

N.T.S.

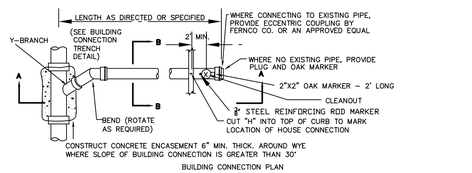

BUILDING CONNECTION PLAN

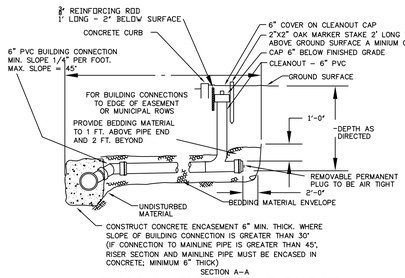

SECTION A–A

BUILDING CONNECTION ELEVATION

BUILDING CONNECTION DETAIL

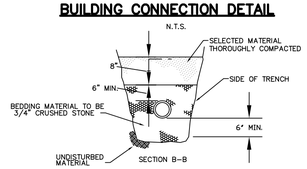

BUILDING CONNECTION TRENCH DETAIL

N.T.S.

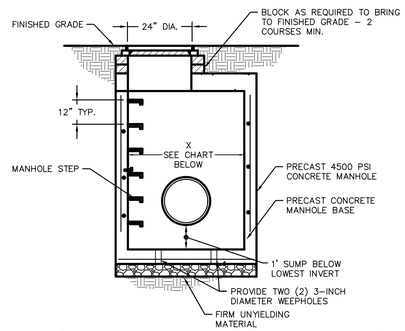

X DIMENSION	INCOMING/OUTGOING PIPE SIZES
48 INCH DIAMETER	EQUAL OR LESS THAN 36 INCH DIAMETER PIPES
60 INCH DIAMETER	42 TO 48 INCH DIAMETER PIPES

NOTES:

1. MANHOLE TO CONFORM TO A.S.T.M. C478 (LATEST REVISION).
2. PRECAST CONCRETE MANHOLES WITH RESILENT SEALS AT JOINTS.
3. MANUFACTURER SHALL CERTIFY ALL COMPONENTS MANHOLE FOR HS20 LOADING
4. RISER SECTION JOINTS SHALL BE FIELD-MORTARED

(Y) YARD DRAIN (MH)

N.T.S.

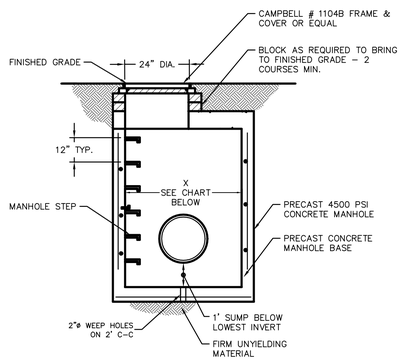

X DIMENSION	INCOMING/OUTGOING PIPE SIZES
48 INCH DIAMETER	EQUAL OR LESS THAN 36 INCH DIAMETER PIPES
60 INCH DIAMETER	42 TO 48 INCH DIAMETER PIPES

NOTES:

1. MANHOLE TO CONFORM TO A.S.T.M. C478 (LATEST REVISION).
2. PRECAST CONCRETE MANHOLES WITH RESILENT SEALS AT JOINTS.
3. MANUFACTURER SHALL CERTIFY ALL COMPONENTS MANHOLE FOR HS20 LOADING
4. RISER SECTION JOINTS SHALL BE FIELD-MORTARED

(D) STORM DRAIN MANHOLE (DMH)

N.T.S.

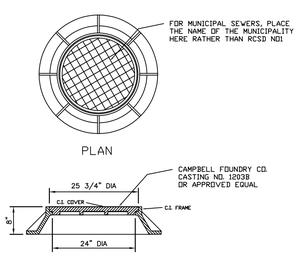

MANHOLE FRAME & COVER

N.T.S.

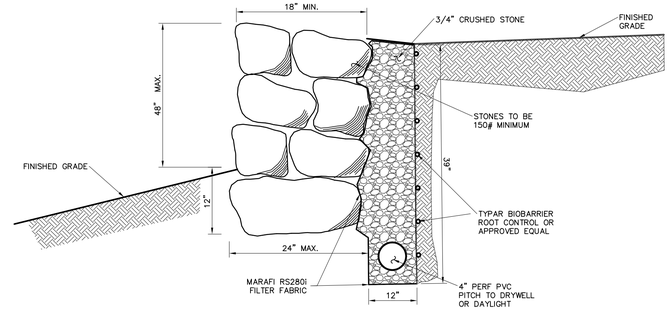

STONE RETAINING WALL DETAIL

N.T.S.

ALL UTILITIES ARE SHOWN IN AN APPROXIMATE WAY FROM AVAILABLE INFORMATION. THE CONTRACTOR SHALL CALL THE LOCAL UNDERGROUND FACILITIES PROTECTIVE ORGANIZATION TO HAVE ALL UNDERGROUND UTILITIES MARKED IN THE FIELD PRIOR TO ANY CLEARING OR ANY CONSTRUCTION. THE CONTRACTOR SHALL ALSO VERIFY THE LOCATION, SIZE AND INVERT OF ALL UTILITIES PRIOR TO ANY CONSTRUCTION. ANY UTILITY FOR WHICH NO EVIDENCE CAN BE SEEN ON THE SURFACE OF THE LANDS MAY NOT BE SHOWN ON THIS DRAWING.

16 NYCRR PART 753 REQUIRES 2 WORKING DAYS NOTICE PRIOR TO START OF ANY UNDERGROUND WORK

DIG SAFELY NEW YORK
WWW.DIGSAFELYNEWYORK.COM
1-800-962-7962

STEVEN M. SPARACO, PE
18 NORTH MAIN STREET
HARRIMAN, NEW YORK 10926
(845) 782-8543

STATE OF NEW YORK · STEVEN MICHAEL SPARACO · 079513 · LICENSED PROFESSIONAL ENGINEER

REVISIONS

1. REV: UPDATED BULK TABLES-10/16/23
2. REV: WALK OUT BASEMENTS, GRADING, DRAINAGE, WALLS-1/9/25

DETAILS (SHEET 1)
FOR
YESHIVAS OHR REUVEN
LOCATED IN
VILLAGE OF WESLEY HILLS
TOWN OF RAMAPO
ROCKLAND COUNTY, NEW YORK
GRAPHIC SCALE
20 10 0 20 40 60

SPARACO & YOUNGBLOOD, PLLC
CIVIL ENGINEERING * LAND SURVEYING
SITE PLANNING
18 NORTH MAIN STREET
P.O. BOX 818
HARRIMAN, N.Y. 10926
TEL: (845) 782-8543
FAX: (845) 782-5901
SPARACO.STEVE@SELSNY.COM WDYLS1@GMAIL.COM

FILE #	SP-4601
DATE	JUNE 3, 2021
SCALE	AS NOTED
DWG #	6 OF 8

SP-4601

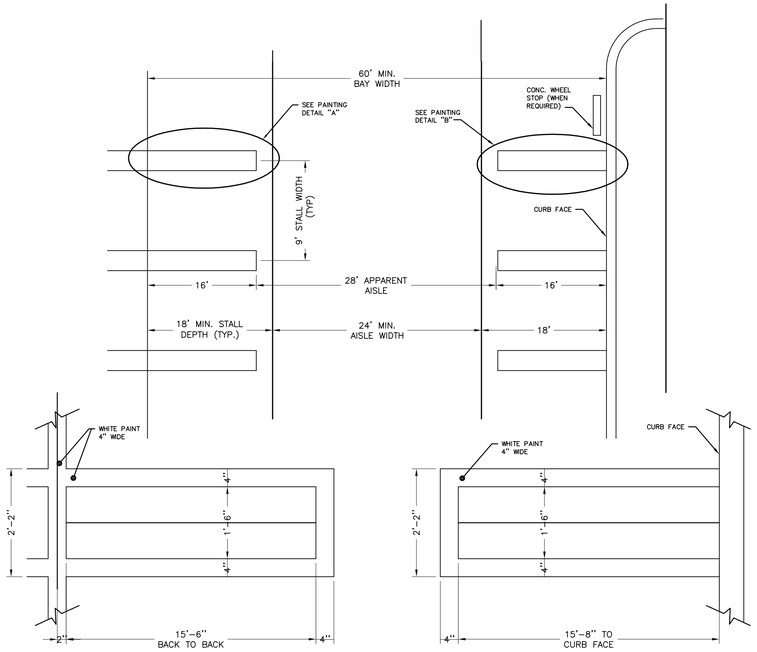

DETAIL "A" **DETAIL "B"**

PARKING AND STRIPING DETAIL

N.T.S.

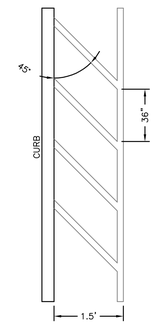

FIRE ZONE STRIPPING
PAINT STRIPES WITH BRIGHT YELLOW
EXTERIOR GRADE ROADWAY PAINT

N.T.S.

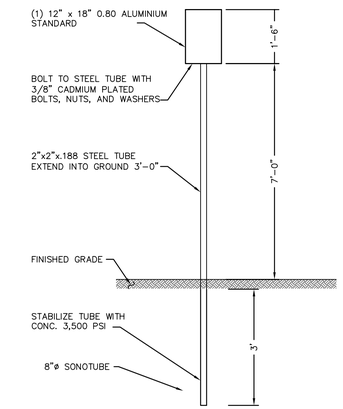

NOTES:
1. PLACE SIGN 3' -0" BEHIND CURB FACE

PARKING SIGN

N.T.S.

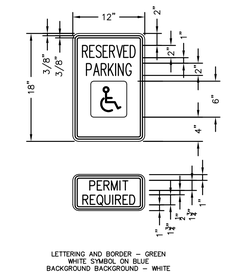

NOTES:
1. HANDICAPPED PARKING SIGN SHALL CONFORM WITH CURRENT STATE AND LOCAL CODES AND REGULATIONS

HANDICAPPED SIGN

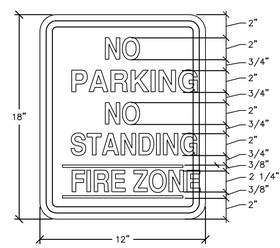

TYPICAL NO PARKING / NO STANDING / FIRE ZONE SIGN DETAIL

N.T.S.

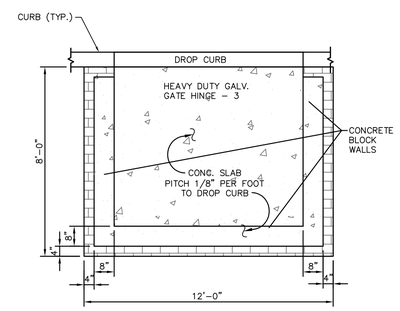

PLAN VIEW

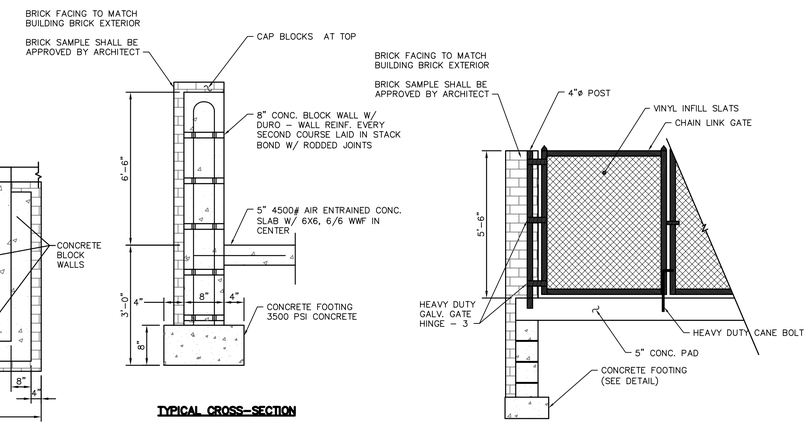

TYPICAL CROSS-SECTION **FRONT VIEW**

NOTES:
1. ALL FASTENINGS SHALL BE GALVANIZED STEEL.
2. SPLIT-FACE DECORATIVE BLOCK MAY BE USED IN LIEU OF BRICK-BLOCK COMBINATION. ARCHITECT SHALL APPROVE SAMPLE OF SPLIT-FACE BLOCK

(G.E.) REFUSE CONTAINMENT STRUCTURE DETAILS

N.T.S.

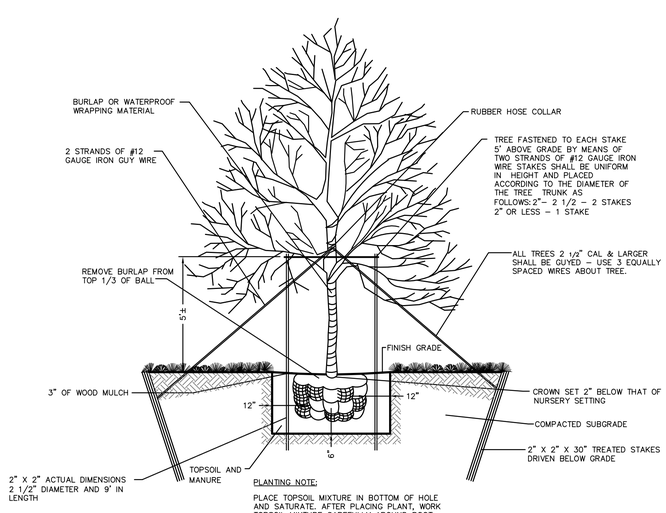

PLANTING NOTE:

PLACE TOPSOIL MIXTURE IN BOTTOM OF HOLE AND SATURATE. AFTER PLACING PLANT, WORK TOPSOIL MIXTURE CAREFULLY AROUND ROOT BALL AND THEN SATURATE. WHEN HOLE IS ONE HALF FULL OF MIXTURE, SATURATE AGAIN. FILL HOLE COMPLETELY WITH TOPSOIL MIXTURE AND SATURATE AGAIN. FERTILIZE SOIL AS NECESSARY FOR PLANT SURVIVAL.

TREE PLANTING DETAIL

N.T.S.

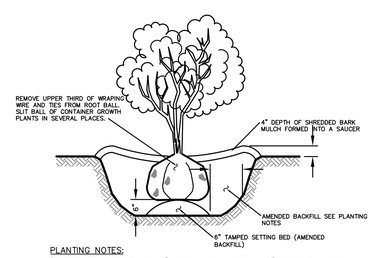

PLANTING NOTES:
1. EXCAVATE A HOLE THAT IS 6" WIDER ON EACH SIDE AND 6" DEEPER THAN ROOT BALL.
2. REMOVE ANY STRING TIED AROUND TRUNK OR STEM, BUT LEAVE BURLAP IN TACT.
3. AMENDED BACKFILL: 4 PARTS TOPSOIL TO 1 PART EACH PEAT HUMUS & DEHYDRATED COW MANURE.
4. WHERE WIRE BASKET IS ALL THAT HOLDS ROOT BALL TOGETHER, CUT WIRES DO NOT REMOVE.
5. SET CROWN OF ROOT BALL 2" ABOVE FINISHED GRADE.
6. BUILD DEPRESSION AROUND PLANT AND FILL WITH MULCH.
7. FOR PLANTS NOT IN CONTAINERS OR BALLED, PRUNE BRANCHES BY 1/4, RETAIN NORMAL PLANT SHAPE.

SHRUB PLANTING DETAIL

N.T.S.

ALL UTILITIES ARE SHOWN IN AN APPROXIMATE WAY FROM AVAILABLE INFORMATION. THE CONTRACTOR SHALL CALL THE LOCAL UNDERGROUND FACILITIES PROTECTIVE ORGANIZATION TO HAVE ALL UNDERGROUND UTILITIES MARKED IN THE FIELD PRIOR TO ANY CLEARING OR ANY CONSTRUCTION. THE CONTRACTOR SHALL ALSO VERIFY THE LOCATION, SIZE AND INVERT OF ALL UTILITIES PRIOR TO ANY CONSTRUCTION. ANY UTILITY FOR WHICH NO EVIDENCE CAN BE SEEN ON THE SURFACE OF THE LANDS MAY NOT BE SHOWN ON THIS DRAWING.

16 NYCRR PART 753
REQUIRES 2 WORKING DAYS NOTICE PRIOR TO START OF ANY UNDERGROUND WORK
DIG SAFELY NEW YORK
WWW.DIGSAFELYNEWYORK.COM
1-800-962-7962

STEVEN M. SPARACO, PE
18 NORTH MAIN STREET
HARRIMAN, NEW YORK 10926
(845) 782-8543

STATE OF NEW YORK · STEVEN MICHAEL SPARACO · 079513 · LICENSED PROFESSIONAL ENGINEER

REVISIONS

1. REV: UPDATED BULK TABLES-10/16/23
2. REV: WALK OUT BASEMENTS, GRADING, DRAINAGE, WALLS-1/9/25

DETAILS (SHEET 2)
FOR
YESHIVAS OHR REUVEN
LOCATED IN
VILLAGE OF WESLEY HILLS
TOWN OF RAMAPO
ROCKLAND COUNTY, NEW YORK

GRAPHIC SCALE
20 10 0 20 40 60

SPARACO & YOUNGBLOOD, PLLC
CIVIL ENGINEERING * LAND SURVEYING
SITE PLANNING
18 NORTH MAIN STREET
P.O. BOX 818
HARRIMAN, N.Y. 10926
TEL: (845) 782-8543
FAX: (845) 782-5901
SPARACO.STEVE@SELSNY.COM WDYLS1@GMAIL.COM

FILE	SP-4601
DATE	JUNE 3, 2021
SCALE	AS NOTED
DWG	7 OF 8

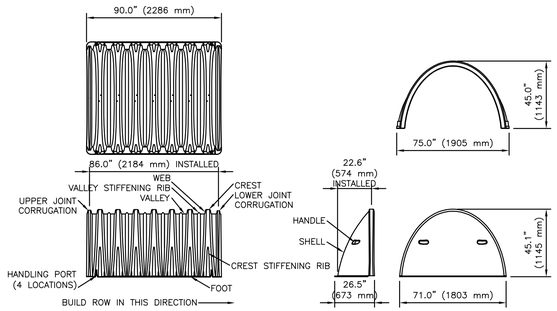

NOMINAL MC-3500 CHAMBER SPECIFICATIONS
SIZE (L x W x H) 90" x 75" x 45" (2286 mm x 1905 mm x 1143 mm)
CHAMBER STORAGE 110.0 ft³ (3.11 m³)
MINIMUM INSTALLED STORAGE 162.8 ft³ (4.61 m³)
WEIGHT 124 lbs. (56.2 kg)

NOMINAL MC-3500 END CAP SPECIFICATIONS
SIZE (L x W x H) 26.5" x 71" x 45" (673 mm x 1803 mm x 1143 mm)
CHAMBER STORAGE 15.6 ft³ (0.44 m³)
MINIMUM INSTALLED STORAGE 41.6 ft³ (1.18 m³)
WEIGHT 43 lbs. (19.5 kg)

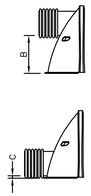

STUBS AT BOTTOM OF END CAP FOR PART NUMBERS ENDING WITH "B"
STUBS AT TOP OF END CAP FOR PART NUMBERS ENDING WITH "T"

PARTS	STUB	B	C
MC3500TEPE12T	12" (300 mm)	26.12" (663 mm)	N/A
MC3500TEPE12B	12" (300 mm)	N/A	1.15" (29 mm)
MC3500TEPE15T	15" (375 mm)	22.48" (571 mm)	N/A
MC3500TEPE15B	15" (375 mm)	N/A	1.30" (33 mm)
MC3500TEPE18T	18" (450 mm)	18.86" (479 mm)	N/A
MC3500TEPE18B	18" (450 mm)	N/A	1.57" (40 mm)
MC3500TEPE24T	24" (600 mm)	12.19" (310 mm)	N/A
MC3500TEPE24B	24" (600 mm)	N/A	1.86" (47 mm)

NOTE: ALL DIMENSIONS ARE NOMINAL

STORMTECH MC-3500 CHAMBER DETAIL

N.T.S.

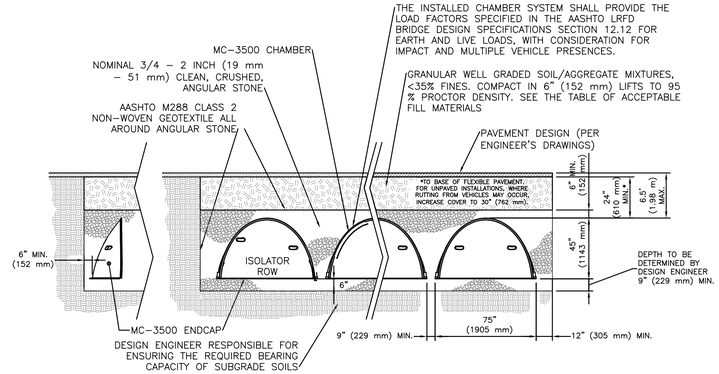

STORMTECH MC-3500 CROSS-SECTION

N.T.S.

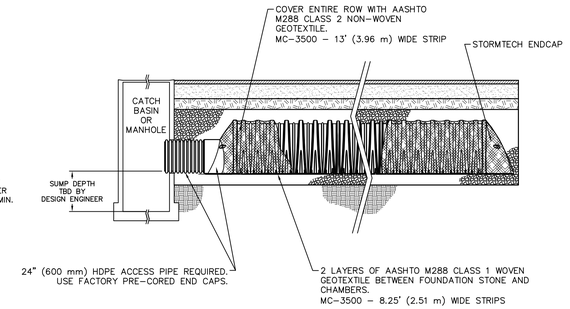

PROFILE: ISOLATOR ROW

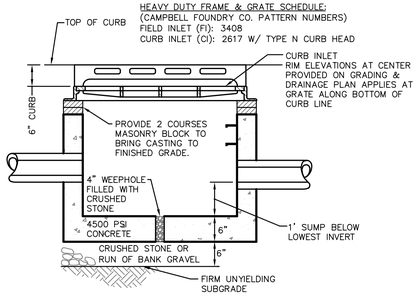

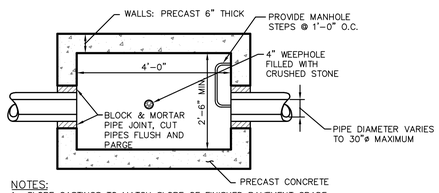

NOTES:
1. SLOPE CASTINGS TO MATCH SLOPE OF FINISHED PAVEMENT GRADE.
2. MINIMUM STRENGTH CONCRETE 4500 PSI WALL THICKNESS 6" WITH ADEQUATE STEEL REINFORCEMENT TO WITHSTAND H20 HIGHWAY LOAD AND SOIL LOADS.

CATCH BASIN, CURB INLET (CI) WITH TYPE N HEAD & FIELD INLET (FI) DETAIL

N.T.S.

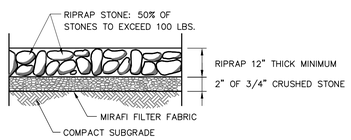

ROCK OUTLET PROTECTION DETAIL

N.T.S.

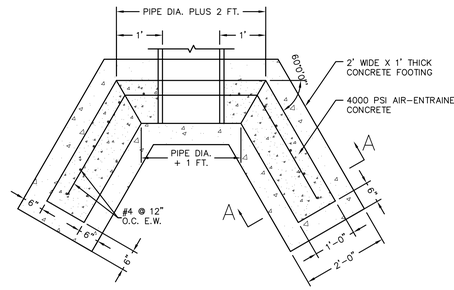

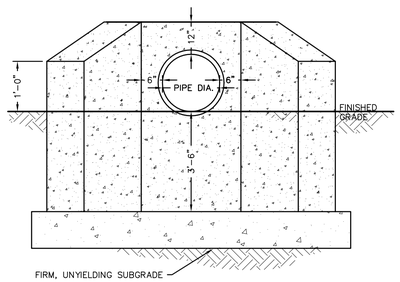

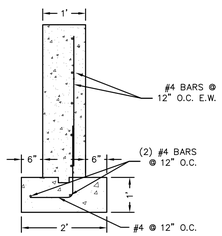

SECTION A–A

CHAMFER ALL EXPOSED EDGES ONE INCH

HEADWALL DETAIL

N.T.S.

ALL UTILITIES ARE SHOWN IN AN APPROXIMATE WAY FROM AVAILABLE INFORMATION. THE CONTRACTOR SHALL CALL THE LOCAL UNDERGROUND FACILITIES PROTECTIVE ORGANIZATION TO HAVE ALL UNDERGROUND UTILITIES MARKED IN THE FIELD PRIOR TO ANY CLEARING OR ANY CONSTRUCTION. THE CONTRACTOR SHALL ALSO VERIFY THE LOCATION, SIZE AND INVERT OF ALL UTILITIES PRIOR TO ANY CONSTRUCTION. ANY UTILITY FOR WHICH NO EVIDENCE CAN BE SEEN ON THE SURFACE OF THE LANDS MAY NOT BE SHOWN ON THIS DRAWING.

16 NYCRR PART 753
REQUIRES 2 WORKING DAYS NOTICE PRIOR TO START OF ANY UNDERGROUND WORK
DIG SAFELY NEW YORK
WWW.DIGSAFELYNEWYORK.COM
1-800-962-7962

REVISIONS

1. REV: UPDATED BULK TABLES-10/6/23
2. REV: WALK OUT BASEMENTS, GRADING, DRAINAGE, WALLS-1/9/25

DETAILS (SHEET 3)
FOR
YESHIVAS OHR REUVEN
LOCATED IN
VILLAGE OF WESLEY HILLS
TOWN OF RAMAPO
ROCKLAND COUNTY, NEW YORK

GRAPHIC SCALE
20 10 0 20 40 60

STEVEN M. SPARACO, PE
18 NORTH MAIN STREET
HARRIMAN, NEW YORK 10926
(845) 782-8543

STATE OF NEW YORK · STEVEN MICHAEL SPARACO · 079513 · LICENSED PROFESSIONAL ENGINEER

SPARACO & YOUNGBLOOD, PLLC
CIVIL ENGINEERING * LAND SURVEYING
SITE PLANNING
18 NORTH MAIN STREET
P.O. BOX 818
HARRIMAN, N.Y. 10926
TEL: (845) 782-8543
FAX: (845) 782-5901
SPARACO.STEVE@SELSNY.COM WDYLS1@GMAIL.COM

FILE #	SP-4601
DATE	JUNE 3, 2021
SCALE	AS NOTED
DWG #	8 OF 8

Short Environmental Assessment Form
Part 1 - Project Information

Instructions for Completing

Part 1 – Project Information. The applicant or project sponsor is responsible for the completion of Part 1. Responses become part of the application for approval or funding, are subject to public review, and may be subject to further verification. Complete Part 1 based on information currently available. If additional research or investigation would be needed to fully respond to any item, please answer as thoroughly as possible based on current information.

Complete all items in Part 1. You may also provide any additional information which you believe will be needed by or useful to the lead agency; attach additional pages as necessary to supplement any item.

Part 1 – Project and Sponsor Information

Name of Action or Project:
Yeshivas Ohr Reuven Amended Site Plan

Project Location (describe, and attach a location map):
This project is located on the Northwesterly side of Grandview Ave. at the intersection of Spook Rock Road in the Village of Wesley Hills.

Brief Description of Proposed Action:
This property is an amended site plan for an existing school to increase parking, dormitory size and add faculty housing (Recently permitted by Local Law No.1 of 2024 and Special Use Permit). Proposed parking would be increased by 51 spaces (utilizing pervious pavers) along the Northerly side of the school. A proposed 18 bed addition to the existing dormitory with a 19 space parking area (utilizing pervious pavers) has been indicated on the Site Plan. Also proposed are (2) two-story, 12-unit buildings, two paved parking areas with impervious surface increases. These increases are proposed to be attenuated by the use of an underground detention system at the Southeasterly corner of the site with an overflow to an existing on site drainage ditch.

Name of Applicant or Sponsor:	Telephone: 845-222-3509
Yeshivas Ohr Reuven	E-Mail: dberman@ohrreuven.com

Address:
259 Grandview Avenue

City/PO:	State:	Zip Code:
Suffern	NY	10901

	NO	YES
1. Does the proposed action only involve the legislative adoption of a plan, local law, ordinance, administrative rule, or regulation? If Yes, attach a narrative description of the intent of the proposed action and the environmental resources that may be affected in the municipality and proceed to Part 2. If no, continue to question 2.	☑	☐
2. Does the proposed action require a permit, approval or funding from any other government Agency? If Yes, list agency(s) name and permit or approval: Village of Wesley Hills Pl. Bd., Town of Ramapo DPW, Rockland Co. Sewer Distr. No. 1, Rockland Co. Health, Hoghway and Planning Dept	☐	☑

3. a. Total acreage of the site of the proposed action? 13.047 acres
   b. Total acreage to be physically disturbed? 1.74 acres
   c. Total acreage (project site and any contiguous properties) owned or controlled by the applicant or project sponsor? 14.297 acres

NOTE: ADDITIONAL LAND IN PROPERTY ACROSS GRANDVIEW AVE. CONSISTS OF APPROXIMATELY 1.25 AC, AND IS UNUSEABLE.

4. Check all land uses that occur on, are adjoining or near the proposed action:

5. ☐ Urban ☐ Rural (non-agriculture) ☐ Industrial ☐ Commercial ☑ Residential (suburban)
   ☐ Forest ☐ Agriculture ☐ Aquatic ☐ Other(Specify):
   ☐ Parkland

	NO	YES
5. Is the proposed action,		
a. A permitted use under the zoning regulations?	☐	☑
b. Consistent with the adopted comprehensive plan?	☐	☑
6. Is the proposed action consistent with the predominant character of the existing built or natural landscape?	☐	☑
7. Is the site of the proposed action located in, or does it adjoin, a state listed Critical Environmental Area? If Yes, identify: , Reason:Exceptional & Unique environmental characteristics, Agency:Village of Montebello, Date:8-06-21	☐	☑
8. a. Will the proposed action result in a substantial increase in traffic above present levels?	☑	☐
b. Are public transportation services available at or near the site of the proposed action?	☑	☐
c. Are any pedestrian accommodations or bicycle routes available on or near the site of the proposed action?	☑	☐
9. Does the proposed action meet or exceed the state energy code requirements? If the proposed action will exceed requirements, describe design features and technologies:	☐	☑
10. Will the proposed action connect to an existing public/private water supply? If No, describe method for providing potable water:	☐	☑
11. Will the proposed action connect to existing wastewater utilities? If No, describe method for providing wastewater treatment:	☐	☑
12. a. Does the project site contain, or is it substantially contiguous to, a building, archaeological site, or district which is listed on the National or State Register of Historic Places, or that has been determined by the Commissioner of the NYS Office of Parks, Recreation and Historic Preservation to be eligible for listing on the State Register of Historic Places?	☑	☐
NOTE: THERE ARE NO FINDINGS OF ARCHEOLOGICAL OR HISTORICAL IMPORTANCE IDENTIFIED. THE IDENTIFIED PARCELS ARE SIMPLY STUDY AREAS. SEE ATTACHED CRIS MAP. b. Is the project site, or any portion of it, located in or adjacent to an area designated as sensitive for archaeological sites on the NY State Historic Preservation Office (SHPO) archaeological site inventory?	☐	☑
13. a. Does any portion of the site of the proposed action, or lands adjoining the proposed action, contain wetlands or other waterbodies regulated by a federal, state or local agency?	☐	☑
b. Would the proposed action physically alter, or encroach into, any existing wetland or waterbody?	☑	☐
If Yes, identify the wetland or waterbody and extent of alterations in square feet or acres:		

14. Identify the typical habitat types that occur on, or are likely to be found on the project site. Check all that apply:

☐ Shoreline ☐ Forest ☐ Agricultural/grasslands ☐ Early mid-successional

☐ Wetland ☐ Urban ☑ Suburban

	NO	YES
15. Does the site of the proposed action contain any species of animal, or associated habitats, listed by the State or Federal government as threatened or endangered? Brook Floater, Timber Rattl...	☐	☑
16. Is the project site located in the 100-year flood plan?	☑	☐
17. Will the proposed action create storm water discharge, either from point or non-point sources?	☐	☑
If Yes,		
a. Will storm water discharges flow to adjacent properties?	☐	☑
b. Will storm water discharges be directed to established conveyance systems (runoff and storm drains)?	☐	☑
If Yes, briefly describe: (See Part 1 brief description)		
18. Does the proposed action include construction or other activities that would result in the impoundment of water or other liquids (e.g., retention pond, waste lagoon, dam)? If Yes, explain the purpose and size of the impoundment:	☑	☐
19. Has the site of the proposed action or an adjoining property been the location of an active or closed solid waste management facility? If Yes, describe:	☑	☐
20. Has the site of the proposed action or an adjoining property been the subject of remediation (ongoing or completed) for hazardous waste? If Yes, describe:	☑	☐

I CERTIFY THAT THE INFORMATION PROVIDED ABOVE IS TRUE AND ACCURATE TO THE BEST OF MY KNOWLEDGE

Applicant/sponsor/name: Steve Sparaco, P.E. Date: 3/19/25

Signature: Title: Professional Engineer

PRINT FORM

EAF Mapper Summary Report

Wednesday, March 19, 2025 12:50 PM

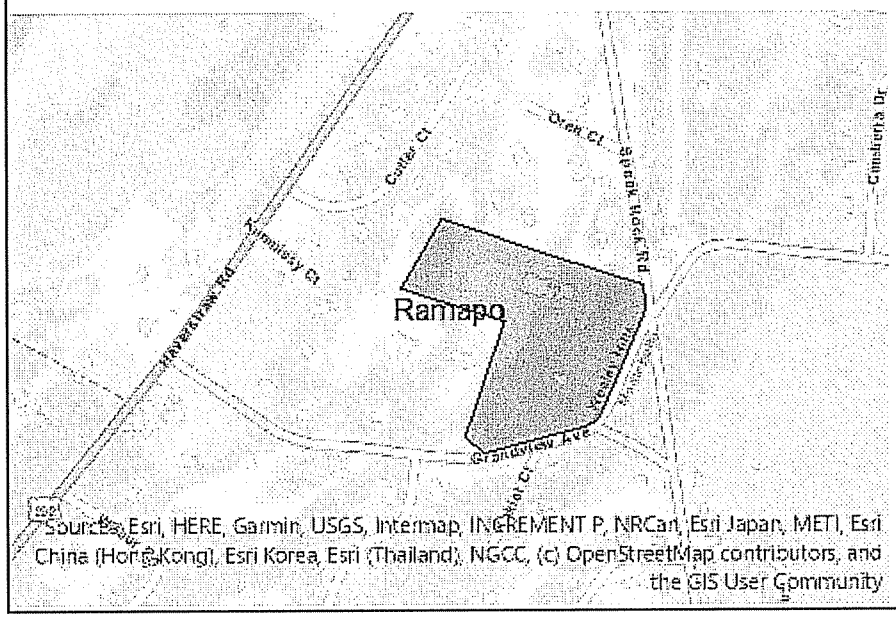

Disclaimer: The EAF Mapper is a screening tool intended to assist project sponsors and reviewing agencies in preparing an environmental assessment form (EAF). Not all questions asked in the EAF are answered by the EAF Mapper. Additional information on any EAF question can be obtained by consulting the EAF Workbooks. Although the EAF Mapper provides the most up-to-date digital data available to DEC, you may also need to contact local or other data sources in order to obtain data not provided by the Mapper. Digital data is not a substitute for agency determinations.

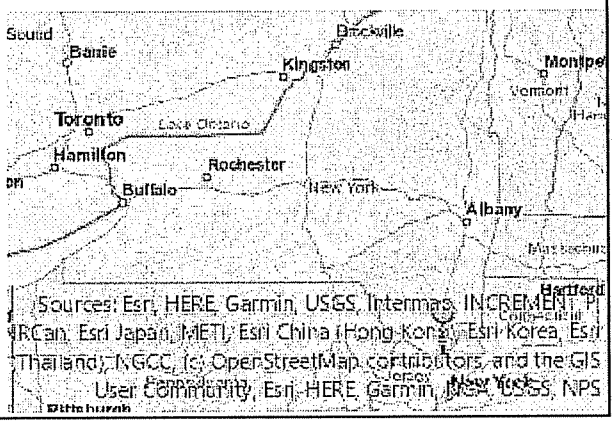

Part 1 / Question 7 [Critical Environmental Area]	Yes
Part 1 / Question 7 [Critical Environmental Area - Identify]	, Reason:Exceptional & Unique environmental characteristics, Agency:Village of Montebello, Date:8-06-21
Part 1 / Question 12a [National or State Register of Historic Places or State Eligible Sites]	No
Part 1 / Question 12b [Archeological Sites]	Yes
Part 1 / Question 13a [Wetlands or Other Regulated Waterbodies]	Yes - Digital mapping information on local and federal wetlands and waterbodies is known to be incomplete. Refer to EAF Workbook.
Part 1 / Question 15 [Threatened or Endangered Animal]	Yes
Part 1 / Question 15 [Threatened or Endangered Animal - Name]	Brook Floater, Timber Rattlesnake
Part 1 / Question 16 [100 Year Flood Plain]	No
Part 1 / Question 20 [Remediation Site]	No

CRIS
Cultural Resource Information System

HOME SUBMIT SEARCH COMMUNICATE

Welcome Guest

Criteria | Spatial | Results

1. Navigate to your area of interest

Option A: Zoom to a County or Municipality

Select County... | Select Municipality... | Zoom

Option B: Find an Address Location

259 Grandview Avenue, Suffern | Find Address

2. Define or refine the location/area for your search

Click a button below to activate the draw tool and draw the shape on the map

Point | Line | Rectangle | Circle | Polygon

3. Generate a search radius around your graphic (Optional)

Generate a [ ] Foot buffer | Generate Buffer

Search | Reset

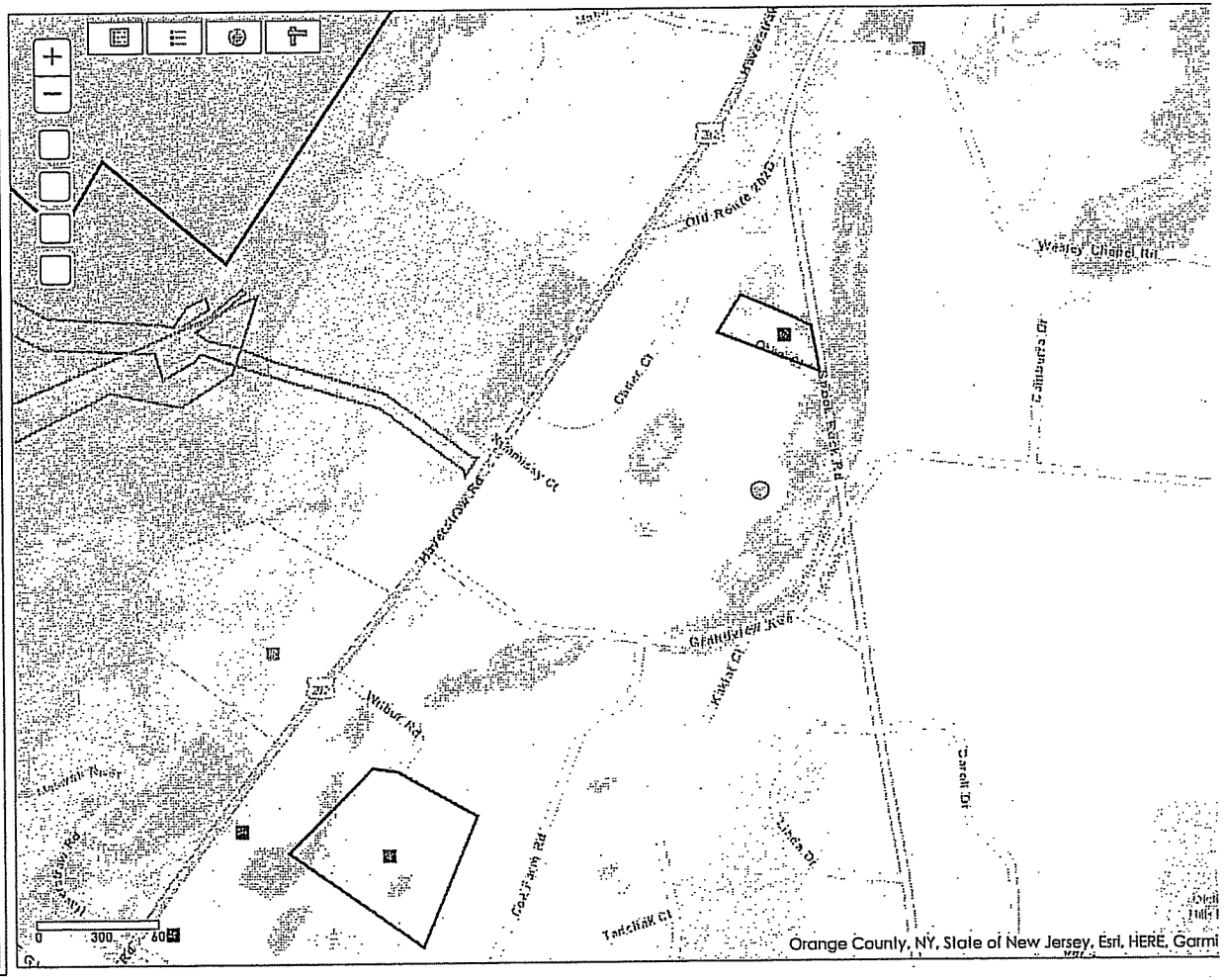

© 2019 New York State Office of Parks, Recreation & Historic Preservation. All rights reserved.

Rockland County

Ed Day, Rockland County Executive

DRAINAGE AGENCY
A DIVISION OF THE HIGHWAY DEPARTMENT
26 Scotland Hill Road, Chestnut Ridge, NY 10977
Phone: (845) 638-5060 Fax: (845) 638-5037
Email: Drainageagency@co.rockland.ny.us

Charles H. "Skip" Vezzetti
Superintendent of Highways
Chairman, Drainage Agency

Vincent Altieri, Esq.
Executive Director

Via email: buildingdept@wesleyhills.org

April 10, 2025

Planning Board
Village of Wesley Hills
432 Route 306
Wesley Hills, NY 10952
Attn.: Alicia Schultz, Deputy Village Clerk

Re: Yeshivas Ohr Reuven Campus Expansion
Location: 251-255 & 257-259 Grandview Avenue, Suffern
Parcel ID(s): Section 40.16, Block 1, Lot(s) 17 & 18
Municipality Village of Wesley Hills
Resource: Willow Tree Brook

Dear Planning Board Members:

The Rockland County Drainage Agency (RCDA) has reviewed the above referenced proposal as prepared by Sparaco & Youngblood, PLLC, dated/last revised 01/09/2025, included with the municipal referral dated 4/2/2025. Based on a review, the RCDA offers the following comment(s):

1) The above referenced site is outside the jurisdiction of the RCDA, pursuant to the Rockland County Stream Control Act, Chapter 846. Therefore, a Stream Control Act permit from the RCDA is not required for developments within this site. Also, the RCDA has no further comments regarding the proposal, pursuant to the State Environmental Quality Review (SEQR).

2) The RCDA recommends that the municipal land use boards and/or departments review all development proposals for this site and ensure that developments with increase in impervious areas and/or land disturbances will not result any increase in stormwater runoff from the site and will have adequate measures to prevent soil erosion and control sediment from leaving the site.

Please contact the RCDA at (845) 638-5060 or by email: drainageagency@co.rockland.ny.us, if you have any questions regarding this matter.

Very truly yours,

Liron Derguti

Liron Derguti, Engineer I
Rockland County Drainage Agency

c: Vincent Altieri, Esq., RCDA
Building Department, Village of Wesley Hills — *buildingdept@wesleyhills.org*
Zoning Board of Appeals, Village of Wesley Hills — *buildingdept@wesleyhills.org*
Rockland County Planning Department — *(by Tyler EPL)*
Rockland County Highway Department — *(by email)*
Nicholas King, Rockland County Sewer District No. 1 — *(by email)*
File — *(File: 25 RGR 38)*

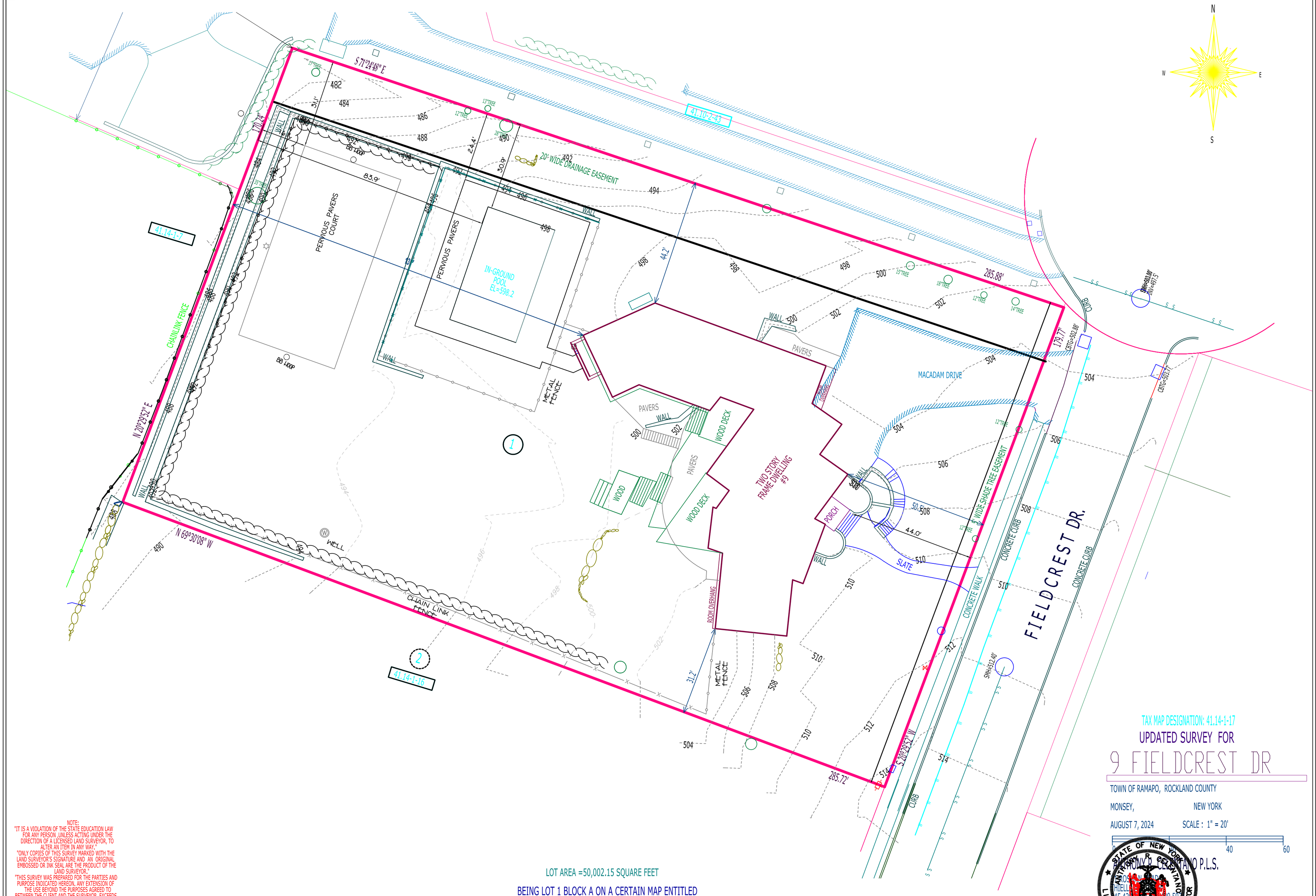

NOTE:
"IT IS A VIOLATION OF THE STATE EDUCATION LAW FOR ANY PERSON ,UNLESS ACTING UNDER THE DIRECTION OF A LICENSED LAND SURVEYOR, TO ALTER AN ITEM IN ANY WAY."
"ONLY COPIES OF THIS SURVEY MARKED WITH THE LAND SURVEYOR'S SIGNATURE AND AN ORIGINAL EMBOSSED OR INK SEAL ARE THE PRODUCT OF THE LAND SURVEYOR."
"THIS SURVEY WAS PREPARED FOR THE PARTIES AND PURPOSE INDICATED HEREON. ANY EXTENSION OF THE USE BEYOND THE PURPOSES AGREED TO BETWEEN THE CLIENT AND THE SURVEYOR EXCEEDS THE SCOPE OF THE ENGAGEMENT."
THIS SURVEY MAP IS SUBJECT TO AN ACCURATE ABSTRACT OF TITLE.
EASEMENTS OR RIGHTS OF WAY ON OR BELOW THE SURFACE OF THE GROUND THAT ARE NOT VISIBLE ARE NOT SHOWN.

LOT AREA =50,002.15 SQUARE FEET

BEING LOT 1 BLOCK A ON A CERTAIN MAP ENTITLED
"CAREFREE HOMES II B"
FILED IN THE ROCKLAND COUNTY CLERK'S OFFICE
AS MAP #4612 BOOK #99 PAGE #72 ON 04/25/1975.

TAX MAP DESIGNATION: 41.14-1-17

UPDATED SURVEY FOR

9 FIELDCREST DR

TOWN OF RAMAPO, ROCKLAND COUNTY

MONSEY, NEW YORK

AUGUST 7, 2024 SCALE : 1" = 20'

0 20 40 60

ANTHONY P. CELENTANO P.L.S.
ROCKLAND COUNTY
SHELL: (845) 425-[illegible] FAX: (845) 429-59[illegible]

STATE OF NEW YORK
ANTHONY P. CELENTANO
No. 050633
LICENSED PROFESSIONAL SURVEYOR

LIC#50633

9884

BROOKER ENGINEERING, PLLC

NY OFFICE
74 Lafayette Avenue
Suite 501
Suffern, New York 10901
Tel: 845.357.441
Fax: 845.357.189

NJ OFFICE
65 Ramapo Valley Road
Suite 208
Mahwah, New Jersey 07430
Tel: 201.684.1221
Fax: 845.357.1896

July 29, 2022

Village of Wesley Hills
432 Route 306
Wesley Hills, New York 10952

Att.: Tara Roberts, Deputy Village Clerk

Re: Clearing, Filling Violation
9 Fieldcrest Drive
WH0196

Dear Ms. Roberts,

As per your request, our office performed a site visit on July 28, 2022 to the above referenced property in response to landfilling without a permit. We observed a new swimming pool installed within a new area of fill, including a tiered retaining wall system, within the rear and side yards of the property. Soil erosion control measures, including perimeter silt fencing and stabilized construction entrance appears to have been adequately installed. It is our understanding that a permit was issued for the swimming pool; however, the extents of the fill and grading operations were not clearly demonstrated on the plan reviewed by the Building Inspector. Additional silt fencing appears necessary near the south-westerly edge of fill. Our office recommends continued maintenance and extension of the silt fence to be installed around all areas downhill of the new fill area. Temporary seeding should also be installed for all exposed soil until the proper permits are obtained.

Based on our field observations, we estimate that the amount of fill exceeds 100 cubic yards in volume. All filling operations not deemed a permit as per Section 95-3-C of the Village code & involving more than 100 cubic yards of material require a Clearing, Filling and Excavating Permit from the Planning Board. It is evident that the imported fill exceeds twice the amount of excavation, if any, was required for the swimming pool. Therefore, the building permit issued for the swimming pool is not deemed a permit as per section 95-3-C(1) of the Village code.

Our office recommends the stop work order be maintained, excluding work to extend the silt fence, install seed, and maintain erosion control devices. The homeowner should be advised to make an application to the Planning Board immediately for a Clearing/Filling Permit. Applicant shall provide a Site Plan detailing the installed fill limits and overall proposed work, as outlined in the Clearing, Filling, Excavation Permit application, including a soil erosion & sediment control plan. Volume and type of imported fill material to be clearly provided on the plans & application. Let it be noted that variances may be required for the future retaining walls & fence heights, if required/proposed.

Please find pictures attached for reference. If you have any questions, please feel free to call.

Very truly yours,

Matthew Trainor, P.E.
Project Engineer
BROOKER ENGINEERING, PLLC

Y:\VILLAGES\WH Wesley Hills\WH0196 - 9 Fieldcrest Dr\2022-07-29 Fill Violation.docx

CAT

FILE

Item 4.

Rachel Cohen
9 Fieldcrest Drive
Monsey, NY 10952

RECEIVED
VILLAGE OF WESLEY HILLS
DEC 13 2024
BUILDING,
PLANNING & ZONING

December 11, 2024

Re: 9 FIELDCREST DRIVE
MONSEY, NY. 10952

Alicia Schultz
Village of Wesley Hills
Building Department
432 Route 306
Wesley Hills, NY 10952

Dear Alicia,

Per our conversation, this letter is to confirm that an application was submitted to the Village of Wesley for Clearing, Filling and Excavation of Land for the above referenced property. The application was submitted because fill was brought in to the property for retaining walls that were needed to construct a new pool and sports court.

Thank you.

Rachel Cohen

FILE

VILLAGE OF WESLEY HILLS

FOR CLEARING, FILLING OR EXCAVATION OF LAND

*Before proceeding with any land disturbance, please contact **"Dig Safely New York"** at **1-800-962-7962**, a free service, to insure a safe dig.*

RECEIVED VILLAGE OF WESLEY HILLS DEC 13 2024 BUILDING, PLANNING & ZONING

APPLICANT: Silber Construction

STREET ADDRESS: 9 Fieldcrest Drive

CITY, STATE Monsey, NY ZIP 10952

TELEPHONE NO.(S) (845) 222-1810

RECEIVED VILLAGE OF WESLEY HILLS OCT 15 2024 BUILDING, PLANNING & ZONING

PROJECT LOCATION

STREET LOCATION: 9 Fieldcrest Drive

TAX MAP SECTION 41.14-1 LOT 17

IF APPLICABLE: SUBDIVISION NAME _____
BLOCK _____ LOT _____

NAME OF PROJECT

1. BRIEFLY DESCRIBE NATURE AND PURPOSE OF LAND DISTURBANCE:

   Construct walls for future pool and patios.

2. AREA TO BE DISTURBED (IN ACRES) 0.30

3. (A) ESTIMATED MAXIMUM QUANTITY OF MATERIAL TO BE EXCAVATED AND/OR REMOVED 70,000 cf=2,593 cy

   (B) ESTIMATED MAXIMUM QUANTITY THAT WILL BE USED FOR REGRADING OR FILLING. (COMPUTED FROM CROSS SECTIONS OF A PROPOSED EXCAVATION OR DISTURBED AREA) 70,000 cf=2,593 cy

4. DESCRIBE ANY MATERIAL TO BE USED FOR LAND FILLING, AND, WHERE FILL IS TO BE BROUGHT ONTO THE PREMISES, ITS SOURCE, METHOD OF TRANSPORT AND ESTIMATED VOLUME Clean fill brought in by trucks. 70,000 cf to construct walls.

5. IS THERE A WELL AND/OR A SEWAGE DISPOSAL SYSTEM WITHIN FIFTY (50) FEET OF THE PROPOSED DISTURBED AREA? No

6. STATE LOCATION AND PRESENT STATUS OF ANY PREVIOUS OPERATIONS OF THE TYPE CONTEMPLATED BY THIS LOCAL LAW OFTHE PROPERTY WITHIN THE PRECEDING YEAR Single Family dwelling.

ESTIMATED COST OF SUCH WORK IN ACCORDANCE WITH THE STANDARDS OF THIS SECTION $20,000.00

"Permission is hereby granted to the Village of Wesley Hills, its agents, servants and employees to enter upon the above described property solely for the purposes incidental to the within application at reasonable times upon reasonable notice to the owner or tenant in possession."

SITE PLAN

A SITE PLAN MUST BE SUBMITTED WITH THIS APPLICATION SHOWING AT LEAST THE FOLLOWING:

(1) THE AREA PROPOSED TO BE DISTURBED AND ITS RELATION TO NEIGHBORING PROPERTIES, TOGETHER WITH BUILDINGS, ROADS, AND NATURAL WATER COURSES, IF ANY, WITHIN 250 FEET OF THE BOUNDARIES OF THE SAID AREA. AN INSET MAP AT A REDUCED SCALE MAY BE USED, IF NECESSARY AND HELPFUL.

(2) THE AREA THAT IS TO BE DISTURBED BY THE PROPOSED EXCAVATION OR LANDFILLING.

(3) THE ESTIMATED MAXIMUM QUANTITY OF MATERIAL TO BE EXCAVATED AND/OR REMOVED AND THE ESTIMATED MAXIMUM QUANTITY THAT WILL BE USED FOR REGRADING OR FILLING, COMPUTED FROM CROSS SECTIONS OF A PROPOSED EXCAVATION OR DISTURBED AREA.

(4) A DESCRIPTION OF ANY MATERIAL TO BE USED FOR LAND FILLING,AND, WHERE FILL IS TO BE BROUGHT INTO THE PREMISES, ITS SOURCE, METHOD OF TRANSPORT AND ESTIMATED VOLUME.

(5) THE LOCATION OF ANY WELL, AND THE DEPTH THEREOF, AND THE LOCATION OF NATURAL WATERCOURSES, IF ANY, LOCATED WITHIN 50 FEET OF THE PROPOSED DISTURBED AREA.

(6) THE LOCATION OF ANY SEWAGE DISPOSAL SYSTEM, ANY PART OF WHICH IS WITHIN 50 FEET OF THE PROPOSED DISTURBED AREA.

(7) EXISTING TOPOGRAPHY OF THE AREA PROPOSED TO BE DISTURBED AT A CONTOUR INTERVAL OF NOT MORE THAN TWO FEET. CONTOURS SHALL BE SHOWN FOR A DISTANCE 50 FEET BEYOND THE LIMITS OF THE PROPOSED DISTURBED AREA.

(8) THE PROPOSED FINAL CONTOURS AT A MAXIMUM CONTOUR INTERVAL OF TWO FEET.

(9) THE LOCATION AND PRESENT STATUS OF ANY PREVIOUS OPERATIONS OF THE TYPE CONTEMPLATED BY THIS LOCAL LAW OF THE PROPERTY WITHIN THE PRECEDING YEAR.

(10) THE DETAILS OF ANY DRAINAGE SYSTEM PROPOSED TO BE INSTALLED AND MAINTAINED BY THE APPLICANT, DESIGNED TO PROVIDE FOR PROPER SURFACE DRAINAGE OF THE LAND, BOTH DURING THE PERFORMANCE OF THE WORK APPLIED FOR, AND AFTER THE COMPLETION THEREOF.

(11) IF A PROPOSED EXCAVATION IS FOR THE PURPOSE OF MAKING A LAKE OR POND, THE DETAILS OF THE PROPOSED CONSTRUCTION OF THE DAM OR OTHER STRUCTURE OR EMBANKMENT INTENDED TO IMPOUND THE WATER, TOGETHER WITH THE DETAILS AND LOCATION OF PROPOSED DISCHARGE AND OF A VALVED OUTLET FOR DRAINAGE PURPOSES.

(12) THE REHABILITATION PROPOSED, AND THE ESTIMATE OF THE COST OF SUCH WORK IN ACCORDANCE WITH THE STANDARDS IN THIS SECTION.

FEE

$100 FOR FIRST 1,000 SQUARE FEET OF AFFECTED AREA, PLUS
$50 FOR EACH ADDITIONAL 1,000 SQUARE FEET OF AFFECTED AREA AS DETERMINED BY VILLAGE ENGINEER.

AMOUNT OF FEE::_____

THE UNDERSIGNED APPLICANT AGREES TO ABIDE BY THE CONDITIONS OF LOCAL LAW NO. 17 OF 1984 OF THE VILLAGE OF WESLEY HILLS

_____
Corporate Seal (If Applicable)

Silber Construction
Company Name (If Applicable)

SIGNATURE

10/14/24
DATE

Builder / Vice President
TITLE (If Applicable)

CONDITIONS:_____

APPROVED BY:_____ TITLE_____

DATE:_____ **Submit (2) Originals + 12 Copies of Application**

NELSON POPE VOORHIS
environmental • land use • planning

MEMORANDUM

To: Lon Lieberman, Chairman
Members, Village of Wesley Hills Planning Board

From: Jonathan T. Lockman, AICP

Re: Rachel Cohen, 9 Fieldcrest Drive – Clearing, Filling or Excavation Permit
SBL# 41.14-1-17

Date: December 27, 2024

cc: Devon Palmieri, P.E., Village Engineer
Bruce Minsky, Esq., Planning Board Attorney
Alicia Schultz, Deputy Village Clerk
John Layne, Building Inspector
Rachel Cohen, Applicant

Received and reviewed for this memorandum:

- Transmittal Letter from Rachel Cohen to Alicia Schultz, re: 9 Fieldcrest Drive, Application Submittal, dated December 11, 2024.
- Application for Clearing, Filling or Excavation of Land, signed by Silber Construction, dated October 14, 2024. (Received by Village of Wesley Hills December 13. 2024)
- Letter from Matthew Trainor, PE, Brooker Engineering, to Tara Roberts, re: Clearing, Filling Violation, 9 Fieldcrest Drive, dated July 29, 2022.
- Survey, 1 sheet, for 9 Fieldcrest Drive, stamped by Anthony Celentano, LPS, dated August 7, 2024.

Project Summary

The subject application is for a Clearing, Filling and Excavation Permit, under Chapter 95 of the Village Code. The subject lot is located in the R-50 District on the west side of Fieldcrest Drive. The applicant is applying after the fact to add 2,593 cubic yards of fill to create a flat area held by retaining walls for construction of a pool and sports court.

Submission Comments

1. The last inspection by the Village Engineer was conducted in July of 2022, nearly two and a half years ago. **The Village Engineer should be requested to perform a follow-up inspection**, prior to the next Planning Board meeting when this matter will be discussed, so the Planning Board has a clearer picture of current conditions.

2. **The finished elevations at the top of the walls and bottom of walls are not understandable** on the Celentano survey. Please show spot elevations at the top and bottom of walls with an "x" and labels of "TW" or "BW," so it is understandable how high the walls have been constructed. **Specifications for the wall construction should be included**, for review by the Village Engineer.

For instance, is the wall between 13 feet high (see closeup below) or 2 feet high? (difference between 496 and 494?) The dashed contour lines around the pool appear to be of the previous grade, rather than the existing finished grade. Also, the elevation of the pool is shown as 598.2 square feet, with the rim of the pool at 498 square feet. **Finished contours appear to be missing south of the pool and basketball court. Please clarify the location of previous and finished contours, with clear labels, with spot elevations for tops and bottoms of walls, which relate to the contours shown.**

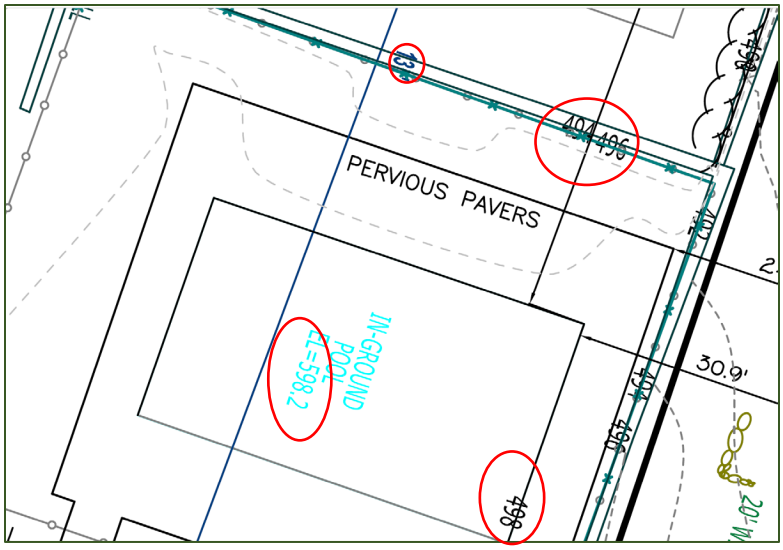

3. It appears that a wall with riprap has been installed along the 285.88-foot property line separating the lot from the drive to the north, which is not shown on the plans. The contours shown do not seem to reflect its existence. **All walls should be included, with zoom-in inset views as necessary (1 inch = 5 feet?)**, so wall heights can be clearly seen. See aerial photo from Google Maps. Is any of this fill work within the 20-foot-wide drainage easement shown on the survey?

4. Section 95-4.A.(1) requires the application to include: "The area proposed to be disturbed and its relation to neighboring properties, together with buildings, roads, and natural watercourses, if any, within 250 feet of the boundaries of the said area. An inset map at a reduced scale may be used, if necessary and helpful." **Please expand the surrounding area shown adjacent to the subject lot, particularly with details on the grading and side slopes adjacent to the western and northern neighbors.**

5. Please provide information on the **source of the fill. The Planning Board may wish for testing to be conducted, and for the test results to be reviewed by the Village Engineer.** See §95-3.B.(3).

6. Per §95-4.A.(10), **please provide drainage details to the satisfaction of the Village Engineer**. We will defer to his review of drainage matters.

7. **Please provide details and notes on how the areas have been reseeded, landscaped, and/or replanted** after the fill was placed, per §95-4.E.

SEQRA/GML Comments

8. The project is for the placement of fill and tree cutting on an approved lot, which typically is considered **a type II action, requiring no SEQRA review**.

9. As no special permit, subdivision or site plan review is involved, no **GML review by Rockland County Planning Department is required**.

Please let me know if you have any questions or comments regarding this review.

BROOKER ENGINEERING
a division of Weston & Sampson
74 Lafayette Avenue, Suite 501, Suffern, NY 10901
Tel: 845.357.4411

January 22, 2025

Village of Wesley Hills
432 Route 306
Wesley Hills, New York 10952

Attn: Alicia Schultz, Building Department

Re: 9 Fieldcrest Drive
Clearing/Filling Permit Application Review

Dear Ms. Schultz,

Our office has reviewed the Planning Board submission package for the above-referenced project which includes the following documents:

- Project Narrative prepared by Rachel Cohen dated December 11, 2024
- Clearing/Filling/Excavation Permit Application prepared by Silber Construction dated October 14, 2024
- Survey entitled "Updated Survey for 9 Fieldcrest Drive", prepared by Anthony Celentano PLS, dated August 7, 2024.

As noted in our 'Clearing, Filling Violation' review letter dated July 29, 2022, our office performed a site visit on July 28, 2022, as requested by the Village, to the above referenced property in response to landfilling without a permit. The Applicant was advised at that time that a Clearing, Filling, Excavation Permit would be required from the Planning Board for the work. Our office performed a follow-up site inspection on August 21, 2023, due to erosion control complaints from neighboring property owners.

It is our understanding that the property received a permit for construction of a pool with pervious paver patio (permit issued November 10, 2021) and a pervious paver sport court with less than 2,500 square feet in ground floor area (permit issued June 8, 2023). At the time of the 2022 site visit, it was also noted that tiered retaining walls were being constructed within the existing 20'-wide Drainage Easement situated along the northern property line. A Stop Work Order was issued by the Village for the retaining walls only on July 21, 2022. The Applicant relocated the tiered retaining walls outside of the 20'-wide Drainage Easement in 2023. At this time, the site is generally complete/stabilized, and the Applicant is now submitting an as-built survey with a post construction Clearing, Filling, Excavation Applicant to the Planning Board to comply with the Village of Wesley Hills Code Chapter 95.

Due to the snow cover at the time of this letter, a site visit has not been performed and will be performed at a future date. Our office offers the following comments regarding the Clearing, Filling, Excavation Application for this property:

1. Survey entitled "Updated Survey for 9 Fieldcrest Drive", prepared by Anthony Celentano PLS, dated August 7, 2024, has been submitted. Applicant to submit a Clearing, Filling, Excavation Plan with the as-built survey as a base addressing the 'Site Plan' requirements outlined in Section 95-4-A. We offer the following comments regarding the submitted plan:
    a. An inset map of the approximate area of disturbance of work performed since 2021 and its relation to properties within 250 feet of disturbed area to be provided.
    b. Approximate area of disturbance of work performed since 2021 to be shown on plan. The submitted Application indicates the 0.30 acres (13,068 square feet) was disturbed; however, based on previous site visits and historical aerial imagery of the property, it appears that the entire rear yard and the majority of the northern side yard had been disturbed during construction which is approximately 24,000 square feet. Applicant to confirm area of disturbance.

   c. The estimated quantity of fill and description of the fill imported to the site to be indicated on the plan.
   d. Provide location of sewage disposal system or show connection to public sewer in Fieldcrest Drive.
   e. Our office requests the Applicant use a heavier line type for the existing contours. Please provide top and bottom wall elevations for the as-built walls.
   f. Plan to include note on how site was rehabilitated in accordance with Section 95-4-E.
2. As-built Bulk table and corresponding calculations to be provided for review of compliance with Village of Wesley Hills Zoning Chapter 230 as required by Section 95-4-C(1).
3. Survey to be updated to show stone walls present in 20'-wide Drainage Easement. Please label stone walls/block walls and provide top and bottom wall elevations.
4. The survey indicates a well at the southern property line. It appears that the well was installed as part of the most recent construction. Applicant to provide copies of the Rockland County Health Department well design approval and installation approval.
5. The survey indicates that pervious pavers have been installed for the pool patio and the sports court resulting in infiltration in fill in close proximity to the block retaining walls. We offer the following comments regarding the pervious pavers:
   a. Certification by the contractor to be submitted stating that the pervious pavers have been installed as per manufacturer requirements. Our office requests a copy of the specifications for the installed pervious pavers to be submitted.
   b. The pervious pavers appear to have been installed over fill. Certification that infiltration in fill requirements as per NYSDEC were adhered to during installation.
   c. A copy of the retaining wall design and structural calculations to be provided. Certification of proper installation of retaining walls exceeding 4' in height to be submitted.
6. Our office defers recommendation of performance bond as per Section 95-4-D until the Application is reviewed by the Planning Board. Due to the timing of the Application and status of the property, it is unclear whether a performance bond would be appropriate.
7. The Application indicates 70,000 cubic-feet of 'clean fill brought in by trucks'. Our office requests copies of the tickets be submitted to the Village for review.
8. Zero-net increase on peak stormwater runoff from pre-project conditions to as-built conditions to be demonstrated.

Recommended fees and dates are as follows:

9. Clearing/Filling Permit fee: To be determined once square footage of disturbance area is confirmed.
10. Performance bond: To be determined.

Our office will continue review upon receipt of a revised plan and requested documentation.

Please note that the above comments are provided for the Clearing, Filling, Excavation Application; additional comments may be provided for an As-Built review when/if the Planning Board approves the Application.

Sincerely,

Devon Palmieri

WESTON & SAMPSON, PE, LS, LA, Architects, PC
Devon Palmieri, EIT
Engineer III

Y:\VILLAGES\WH Wesley Hills\WH0196 - 9 Fieldcrest Dr\2025-01-22_9 Fieldcrest Clearing,Filling Application.docx

CIVIL DESIGN WORKS LLC

Glenn McCreedy, P.E., C.M.E.
Stuart Strow, P.E., C.F.M.

January 15, 2025

Village of Wesley Hills
Building Department
432 Route 306
Wesley Hills, New York 10952

Attn: Alicia Schultz, Building Clerk

Re: 9 Fieldcrest Drive
Tax Lot 41.14-1-17
Clearing and filling violation
CDW #WH24-323

Dear Ms. Schultz,

We have received and reviewed:

1. Application for Clearing, Filling or Excavation of Land, dated 10/14/2024.
2. Clearing, Filling Violation letter signed by Matthew Trainor, PE, Brooker Engineering, PLLC, dated July 29, 2022.
3. Updated survey for 9 Fieldcrest Drive, prepared by Anthony Celentano, PLS, dated August 7, 2024.

We have performed a review of the submitted documents as noted above. It is understood that this application is submitted to correct a violation that involved the construction of the retaining walls and placement of fills without a permit.

The Application materials as submitted are incomplete, and the Applicant shall submit the following:

1. A Site Plan meeting all requirements as on the Permit Application Form for "Clearing, Filling or Excavation of Land" must be provided. The site plan should clearly show pre-construction and proposed/post-construction topography. It should also clearly denote whether features (walls, sports court, etc.) are existing or proposed at this time.
2. A bulk table with dimensions and appropriate calculations for impervious surface ratio and building coverage should be provided. If any variances are required, it shall be noted on the plan.
3. A vicinity map shall be provided on the site plan.
4. The survey shows an existing well near the end of the retaining wall on the southwesterly side of the site. The application form (question #5) states that there are no wells within 50 feet of the disturbed area. The application form should be corrected, and the site plan shall clearly state the purpose of the well, and if the well is to remain or to be abandoned. If the well is proposed to remain on site, appropriate details showing modification of the well are required. The site plan shall also note whether any approvals for the well have been obtained or are required from the Rockland County Department of Health.
5. Provide a cut and fill analysis indicating the volume of excavation and the volume of fill that has been brought onto the site.

6. A receipt and/or certification letter containing the source of fill material, description of the material and volume of fill brought to the site shall be provided. The source, volume and a description of the fill material shall be noted on the site plan. If certifications are not available, testing of the imported fill material may be required.
7. Drainage calculations and details of pervious pavers shall be provided.
8. The site plan shall include notes and details as may be required for the restoration, seeding and final stabilization of disturbed areas.
9. Details of the retaining walls shall be provided on the site plan. Top and bottom elevations of existing and proposed walls shall be shown on the site plan. If the height of a wall exceeds four feet, a certification letter from a licensed Professional Engineer will be required.
10. The plan that was submitted with the application is an Updated Survey. The applicant may choose to use this as a "post-construction" conditions plan, and it should be updated to meet the Village of Wesley Hills final survey checklist requirements. Please note, the survey shall show retaining walls top and bottom elevations.
11. The site plan shall denote the limit and area of disturbance. Application fees will be calculated based on the affected area of disturbance, as noted on the permit application form.

Please contact our office if you have any questions. We will continue our review upon receipt of updated/revised plan submissions and materials.

Sincerely,

Civil Design Works, LLC
Alena Guckian, P.E.
Senior Project Engineer

W:\Projects\WH\2024\WH24-323 - 9 Fieldcrest Drive\Correspondence\2025-1-15_9 Fieldcrest Drive.docx

CATGO
Materials Testing
209 Main St Highland Falls 10928

April 18, 2025

Client: Silber Construction
Project: 9 Fieldcrest Drive
Location: Monsey, NY

On April 2nd, a representative from CATGO Materials Testing visited the project site to take a soil sample of the imported fill material. Material had been previously placed at the project site. CATGO representative excavated through the topsoil and sampled the imported fill at multiple locations to form a composite sample. The sample was then delivered to Phoenix Environmental Laboratories for analytical testing. See attached test results.

Gabriel J. O'Connell P.E.
goconnell@catgomt.com
845-656-3765

PHOENIX
Environmental Laboratories, Inc.

Friday, April 18, 2025

Attn: Mr. Scott Taylor
Taylord Environment, Inc.
PO BOX 613
Wingdale, NY 12594

Project ID: 9 FIELD CREST DR
SDG ID: GCS98011
Sample ID#s: CS98011

This laboratory is in compliance with the NELAC requirements of procedures used except where indicated.

This report contains results for the parameters tested, under the sampling conditions described on the Chain Of Custody, as received by the laboratory. This report is incomplete unless all pages indicated in the pagination at the bottom of the page are included.

All soils, solids and sludges are reported on a dry weight basis unless otherwise noted in the sample comments.

A scanned version of the COC form accompanies the analytical report and is an exact duplicate of the original.

The contents of this report cannot be discussed with anyone other than the client listed above without their written consent.

Sincerely yours,

Phyllis Shiller
Laboratory Director

NELAC - #NY11301
CT Lab Registration #PH-0618
MA Lab Registration #M-CT007
ME Lab Registration #CT-007
NH Lab Registration #213693-A,B
NJ Lab Registration #CT-003
NY Lab Registration #11301
PA Lab Registration #68-03530
RI Lab Registration #63
VT Lab Registration #VT11301

PHOENIX

Environmental Laboratories, Inc.
587 East Middle Turnpike, P.O.Box 370, Manchester, CT 06045
Tel. (860) 645-1102 Fax (860) 645-0823

ACCREDITED IN ACCORDANCE WITH nelac NY # 11301

SDG Comments

April 18, 2025

SDG I.D.: GCS98011

Please be advised that the NY 375 soil criteria for chromium are based on hexavalent chromium and trivalent chromium.

Environmental Laboratories, Inc.
587 East Middle Turnpike, P.O.Box 370, Manchester, CT 06045
Tel. (860) 645-1102 Fax (860) 645-0823

ACCREDITED IN ACCORDANCE WITH nelac NY # 11301

Sample Id Cross Reference

April 18, 2025

SDG I.D.: GCS98011

Project ID: 9 FIELD CREST DR

Client Id	Lab Id	Matrix	Col Date
IMPORT SOIL	CS98011	SOIL	04/02/25 0:00

PHOENIX
Environmental Laboratories, Inc.
587 East Middle Turnpike, P.O.Box 370, Manchester, CT 06045
Tel. (860) 645-1102

ACCREDITED IN ACCORDANCE WITH nelac NY # 11301

Analysis Report

April 18, 2025

FOR: Attn: Mr. Scott Taylor
Taylord Environment, Inc.
PO BOX 613
Wingdale, NY 12594

Sample Information		Custody Information		Date	Time
Matrix:	SOIL	Collected by:		04/02/25	
Location Code:	TAYLORD	Received by:	SW	04/03/25	17:30
Rush Request:	Standard	Analyzed by:	see "By" below		
P.O.#:					

Laboratory Data

SDG ID: GCS98011
Phoenix ID: CS98011

Project ID: 9 FIELD CREST DR
Client ID: IMPORT SOIL

Parameter	Result	RL/ PQL	LOD/ MDL	Units	Dilution	Date/Time	By	Reference	
Silver	< 0.36	0.36		mg/Kg	1	04/08/25	TH	SW6010D	
Arsenic	3.41	0.71		mg/Kg	1	04/08/25	TH	SW6010D	
Barium	43.9	0.36		mg/Kg	1	04/08/25	TH	SW6010D	
Beryllium	0.39	0.28		mg/Kg	1	04/08/25	TH	SW6010D	
Cadmium	< 0.36	0.36		mg/Kg	1	04/08/25	TH	SW6010D	
Chromium	15.0	0.36		mg/Kg	1	04/08/25	TH	SW6010D	
Copper	19.9	0.7		mg/kg	1	04/08/25	TH	SW6010D	
Mercury	< 0.23	0.23		mg/Kg	1	04/08/25	JM	SW7473	
Manganese	317	0.36		mg/Kg	1	04/08/25	TH	SW6010D	
Nickel	11.9	0.36		mg/Kg	1	04/08/25	TH	SW6010D	
Lead	18.6	0.36		mg/Kg	1	04/08/25	TH	SW6010D	
Selenium	< 1.4	1.4		mg/Kg	1	04/08/25	TH	SW6010D	
Trivalent Chromium	15.0	0.36		mg/kg	1	04/08/25		CALC 6010-7196	
Zinc	37.5	0.7		mg/Kg	1	04/08/25	TH	SW6010D	
Percent Solid	88			%		04/03/25	CV	SW846-%Solid	
Chromium, Hex. (SW3060A digestion	< 0.42	0.42		mg/Kg	1	04/04/25	NP	SW7196A	
pH at 21C - Soil	8.04	1.00		pH Units	1	04/03/25 23:35	KG	SW846 9045D	
Redox Potential	186			mV	1	04/03/25	KG	SM2580B-09	1
Total Cyanide (SW9010C Distill.)	< 0.57	0.57		mg/Kg	1	04/07/25	I/A/G	SW9012B	
Field Extraction	Completed					04/02/25		SW5035A	1
Soil Extraction for Herbicide	Completed					04/09/25	Y/MQ	SW3546	
Soil Extraction for PCB	Completed					04/14/25	H/F	SW3546	
Soil Extraction for Pesticides	Completed					04/14/25	H/F	SW3546	
Soil Extraction for SVOA	Completed					04/14/25	S/F	SW3546	
Total Metals Digest	Completed					04/04/25	N/AG	SW3050B	

Project ID: 9 FIELD CREST DR
Client ID: IMPORT SOIL

Phoenix I.D.: CS98[illegible]

Parameter	Result	RL/ PQL	LOD/ MDL	Units	Dilution	Date/Time	By	Reference
Chlorinated Herbicides								
2,4,5-T	ND	140		ug/Kg	10	04/11/25	JRB	SW8151A
2,4,5-TP (Silvex)	ND	140		ug/Kg	10	04/11/25	JRB	SW8151A
2,4-D	ND	280		ug/Kg	10	04/11/25	JRB	SW8151A
2,4-DB	ND	2800		ug/Kg	10	04/11/25	JRB	SW8151A
Dalapon	ND	140		ug/Kg	10	04/11/25	JRB	SW8151A
Dicamba	ND	140		ug/Kg	10	04/11/25	JRB	SW8151A
Dichloroprop	ND	280		ug/Kg	10	04/11/25	JRB	SW8151A
Dinoseb	ND	280		ug/Kg	10	04/11/25	JRB	SW8151A
QA/QC Surrogates								
% DCAA	71			%	10	04/11/25	JRB	30 - 150 %
% DCAA (Confirmation)	76			%	10	04/11/25	JRB	30 - 150 %
Polychlorinated Biphenyls								
PCB-1016	ND	380		ug/Kg	10	04/15/25	SC	SW8082A
PCB-1221	ND	380		ug/Kg	10	04/15/25	SC	SW8082A
PCB-1232	ND	380		ug/Kg	10	04/15/25	SC	SW8082A
PCB-1242	ND	380		ug/Kg	10	04/15/25	SC	SW8082A
PCB-1248	ND	380		ug/Kg	10	04/15/25	SC	SW8082A
PCB-1254	ND	380		ug/Kg	10	04/15/25	SC	SW8082A
PCB-1260	ND	380		ug/Kg	10	04/15/25	SC	SW8082A
PCB-1262	ND	380		ug/Kg	10	04/15/25	SC	SW8082A
PCB-1268	ND	380		ug/Kg	10	04/15/25	SC	SW8082A
QA/QC Surrogates								
% DCBP	123			%	10	04/15/25	SC	30 - 150 %
% DCBP (Confirmation)	130			%	10	04/15/25	SC	30 - 150 %
% TCMX	123			%	10	04/15/25	SC	30 - 150 %
% TCMX (Confirmation)	124			%	10	04/15/25	SC	30 - 150 %
Pesticides - Soil								
4,4' -DDD	ND	2.3		ug/Kg	2	04/15/25	AW	SW8081B
4,4' -DDE	12	2.3		ug/Kg	2	04/15/25	AW	SW8081B
4,4' -DDT	7.3	2.3		ug/Kg	2	04/15/25	AW	SW8081B
a-BHC	ND	7.5		ug/Kg	2	04/15/25	AW	SW8081B
a-Chlordane	ND	3.8		ug/Kg	2	04/15/25	AW	SW8081B
Aldrin	ND	3.8		ug/Kg	2	04/15/25	AW	SW8081B
b-BHC	ND	7.5		ug/Kg	2	04/15/25	AW	SW8081B
Chlordane	ND	38		ug/Kg	2	04/15/25	AW	SW8081B
d-BHC	ND	7.5		ug/Kg	2	04/15/25	AW	SW8081B
Dieldrin	4.8	3.8		ug/Kg	2	04/15/25	AW	SW8081B
Endosulfan I	ND	7.5		ug/Kg	2	04/15/25	AW	SW8081B
Endosulfan II	ND	7.5		ug/Kg	2	04/15/25	AW	SW8081B
Endosulfan sulfate	ND	7.5		ug/Kg	2	04/15/25	AW	SW8081B
Endrin	ND	7.5		ug/Kg	2	04/15/25	AW	SW8081B
Endrin aldehyde	ND	7.5		ug/Kg	2	04/15/25	AW	SW8081B
Endrin ketone	ND	7.5		ug/Kg	2	04/15/25	AW	SW8081B
g-BHC	ND	1.5		ug/Kg	2	04/15/25	AW	SW8081B
g-Chlordane	ND	3.8		ug/Kg	2	04/15/25	AW	SW8081B
Heptachlor	ND	7.5		ug/Kg	2	04/15/25	AW	SW8081B

Project ID: 9 FIELD CREST DR
Client ID: IMPORT SOIL

Phoenix I.D.: CS98[illegible]

Parameter	Result	RL/ PQL	LOD/ MDL	Units	Dilution	Date/Time	By	Reference
Heptachlor epoxide	ND	7.5		ug/Kg	2	04/15/25	AW	SW8081B
Methoxychlor	ND	38		ug/Kg	2	04/15/25	AW	SW8081B
Toxaphene	ND	150		ug/Kg	2	04/15/25	AW	SW8081B
QA/QC Surrogates								
% DCBP	92			%	2	04/15/25	AW	30 - 150 %
% DCBP (Confirmation)	82			%	2	04/15/25	AW	30 - 150 %
% TCMX	89			%	2	04/15/25	AW	30 - 150 %
% TCMX (Confirmation)	91			%	2	04/15/25	AW	30 - 150 %
Volatiles								
1,1,1,2-Tetrachloroethane	ND	4.6		ug/Kg	1	04/05/25	JLI	SW8260D
1,1,1-Trichloroethane	ND	4.6		ug/Kg	1	04/05/25	JLI	SW8260D
1,1,2,2-Tetrachloroethane	ND	480		ug/Kg	50	04/08/25	JLI	SW8260D
1,1,2-Trichloroethane	ND	4.6		ug/Kg	1	04/05/25	JLI	SW8260D
1,1-Dichloroethane	ND	4.6		ug/Kg	1	04/05/25	JLI	SW8260D
1,1-Dichloroethene	ND	4.6		ug/Kg	1	04/05/25	JLI	SW8260D
1,1-Dichloropropene	ND	4.6		ug/Kg	1	04/05/25	JLI	SW8260D
1,2,3-Trichlorobenzene	ND	480		ug/Kg	50	04/08/25	JLI	SW8260D
1,2,3-Trichloropropane	ND	480		ug/Kg	50	04/08/25	JLI	SW8260D
1,2,4-Trichlorobenzene	ND	480		ug/Kg	50	04/08/25	JLI	SW8260D
1,2,4-Trimethylbenzene	ND	480		ug/Kg	50	04/08/25	JLI	SW8260D
1,2-Dibromo-3-chloropropane	ND	480		ug/Kg	50	04/08/25	JLI	SW8260D
1,2-Dibromoethane	ND	4.6		ug/Kg	1	04/05/25	JLI	SW8260D
1,2-Dichlorobenzene	ND	480		ug/Kg	50	04/08/25	JLI	SW8260D
1,2-Dichloroethane	ND	4.6		ug/Kg	1	04/05/25	JLI	SW8260D
1,2-Dichloropropane	ND	4.6		ug/Kg	1	04/05/25	JLI	SW8260D
1,3,5-Trimethylbenzene	ND	480		ug/Kg	50	04/08/25	JLI	SW8260D
1,3-Dichlorobenzene	ND	480		ug/Kg	50	04/08/25	JLI	SW8260D
1,3-Dichloropropane	ND	4.6		ug/Kg	1	04/05/25	JLI	SW8260D
1,4-Dichlorobenzene	ND	480		ug/Kg	50	04/08/25	JLI	SW8260D
2,2-Dichloropropane	ND	4.6		ug/Kg	1	04/05/25	JLI	SW8260D
2-Chlorotoluene	ND	480		ug/Kg	50	04/08/25	JLI	SW8260D
2-Hexanone	ND	23		ug/Kg	1	04/05/25	JLI	SW8260D
2-Isopropyltoluene	ND	480		ug/Kg	50	04/08/25	JLI	SW8260D 1
4-Chlorotoluene	ND	480		ug/Kg	50	04/08/25	JLI	SW8260D
4-Methyl-2-pentanone	ND	23		ug/Kg	1	04/05/25	JLI	SW8260D
Acetone	ND	23		ug/Kg	1	04/05/25	JLI	SW8260D
Acrylonitrile	ND	9.2		ug/Kg	1	04/05/25	JLI	SW8260D
Benzene	ND	4.6		ug/Kg	1	04/05/25	JLI	SW8260D
Bromobenzene	ND	480		ug/Kg	50	04/08/25	JLI	SW8260D
Bromochloromethane	ND	4.6		ug/Kg	1	04/05/25	JLI	SW8260D
Bromodichloromethane	ND	4.6		ug/Kg	1	04/05/25	JLI	SW8260D
Bromoform	ND	4.6		ug/Kg	1	04/05/25	JLI	SW8260D
Bromomethane	ND	4.6		ug/Kg	1	04/05/25	JLI	SW8260D
Carbon Disulfide	ND	4.6		ug/Kg	1	04/05/25	JLI	SW8260D
Carbon tetrachloride	ND	4.6		ug/Kg	1	04/05/25	JLI	SW8260D
Chlorobenzene	ND	4.6		ug/Kg	1	04/05/25	JLI	SW8260D
Chloroethane	ND	4.6		ug/Kg	1	04/05/25	JLI	SW8260D
Chloroform	ND	4.6		ug/Kg	1	04/05/25	JLI	SW8260D
Chloromethane	ND	4.6		ug/Kg	1	04/05/25	JLI	SW8260D

Project ID: 9 FIELD CREST DR
Client ID: IMPORT SOIL

Phoenix I.D.: CS98[illegible]

Parameter	Result	RL/ PQL	LOD/ MDL	Units	Dilution	Date/Time	By	Reference
cis-1,2-Dichloroethene	ND	4.6		ug/Kg	1	04/05/25	JLI	SW8260D
cis-1,3-Dichloropropene	ND	4.6		ug/Kg	1	04/05/25	JLI	SW8260D
Dibromochloromethane	ND	4.6		ug/Kg	1	04/05/25	JLI	SW8260D
Dibromomethane	ND	4.6		ug/Kg	1	04/05/25	JLI	SW8260D
Dichlorodifluoromethane	ND	4.6		ug/Kg	1	04/05/25	JLI	SW8260D
Ethylbenzene	ND	4.6		ug/Kg	1	04/05/25	JLI	SW8260D
Hexachlorobutadiene	ND	480		ug/Kg	50	04/08/25	JLI	SW8260D
Isopropylbenzene	ND	480		ug/Kg	50	04/08/25	JLI	SW8260D
m&p-Xylene	ND	4.6		ug/Kg	1	04/05/25	JLI	SW8260D
Methyl Ethyl Ketone	ND	23		ug/Kg	1	04/05/25	JLI	SW8260D
Methyl t-butyl ether (MTBE)	ND	9.2		ug/Kg	1	04/05/25	JLI	SW8260D
Methylene chloride	ND	9.2		ug/Kg	1	04/05/25	JLI	SW8260D
Naphthalene	ND	480		ug/Kg	50	04/08/25	JLI	SW8260D
n-Butylbenzene	ND	480		ug/Kg	50	04/08/25	JLI	SW8260D
n-Propylbenzene	ND	480		ug/Kg	50	04/08/25	JLI	SW8260D
o-Xylene	ND	4.6		ug/Kg	1	04/05/25	JLI	SW8260D
p-Isopropyltoluene	ND	480		ug/Kg	50	04/08/25	JLI	SW8260D
sec-Butylbenzene	ND	480		ug/Kg	50	04/08/25	JLI	SW8260D
Styrene	ND	4.6		ug/Kg	1	04/05/25	JLI	SW8260D
tert-Butylbenzene	ND	480		ug/Kg	50	04/08/25	JLI	SW8260D
Tetrachloroethene	ND	4.6		ug/Kg	1	04/05/25	JLI	SW8260D
Tetrahydrofuran (THF)	ND	9.2		ug/Kg	1	04/05/25	JLI	SW8260D
Toluene	ND	4.6		ug/Kg	1	04/05/25	JLI	SW8260D
Total Xylenes	ND	4.6		ug/Kg	1	04/05/25	JLI	SW8260D
trans-1,2-Dichloroethene	ND	4.6		ug/Kg	1	04/05/25	JLI	SW8260D
trans-1,3-Dichloropropene	ND	4.6		ug/Kg	1	04/05/25	JLI	SW8260D
trans-1,4-dichloro-2-butene	ND	970		ug/Kg	50	04/08/25	JLI	SW8260D
Trichloroethene	ND	4.6		ug/Kg	1	04/05/25	JLI	SW8260D
Trichlorofluoromethane	ND	4.6		ug/Kg	1	04/05/25	JLI	SW8260D
Trichlorotrifluoroethane	ND	4.6		ug/Kg	1	04/05/25	JLI	SW8260D
Vinyl chloride	ND	4.6		ug/Kg	1	04/05/25	JLI	SW8260D
QA/QC Surrogates								
% 1,2-dichlorobenzene-d4	102			%	1	04/05/25	JLI	70 - 130 %
% Bromofluorobenzene	95			%	1	04/05/25	JLI	70 - 130 %
% Dibromofluoromethane	98			%	1	04/05/25	JLI	70 - 130 %
% Toluene-d8	91			%	1	04/05/25	JLI	70 - 130 %
% 1,2-dichlorobenzene-d4 (50x)	96			%	50	04/08/25	JLI	70 - 130 %
% Bromofluorobenzene (50x)	99			%	50	04/08/25	JLI	70 - 130 %
% Dibromofluoromethane (50x)	97			%	50	04/08/25	JLI	70 - 130 %
% Toluene-d8 (50x)	90			%	50	04/08/25	JLI	70 - 130 %

1,4-dioxane

1,4-dioxane	ND	69		ug/kg	1	04/05/25	JLI	SW8260D
QA/QC Surrogates								
% 1,2-dichlorobenzene-d4	102			%	1	04/05/25	JLI	70 - 130 %
% Bromofluorobenzene	95			%	1	04/05/25	JLI	70 - 130 %
% Dibromofluoromethane	98			%	1	04/05/25	JLI	70 - 130 %
% Toluene-d8	91			%	1	04/05/25	JLI	70 - 130 %

Project ID: 9 FIELD CREST DR
Client ID: IMPORT SOIL

Phoenix I.D.: CS98[illegible]

Parameter	Result	RL/ PQL	LOD/ MDL	Units	Dilution	Date/Time	By	Reference	
Volatiles									
1,1,1,2-Tetrachloroethane	ND	18		ug/Kg	1	04/05/25	JLI	SW8260D	
Acrolein	ND	4.6		ug/Kg	1	04/05/25	JLI	SW8260D	
Acrylonitrile	ND	18		ug/Kg	1	04/05/25	JLI	SW8260D	
Tert-butyl alcohol	ND	92		ug/Kg	1	04/05/25	JLI	SW8260D	
Methylacetate	ND	4.6		ug/Kg	1	04/05/25	JLI	SW8260D	
Semivolatiles									
1,2,4,5-Tetrachlorobenzene	ND	260		ug/Kg	1	04/15/25	MR	SW8270E	
1,2,4-Trichlorobenzene	ND	260		ug/Kg	1	04/15/25	MR	SW8270E	
1,2-Dichlorobenzene	ND	260		ug/Kg	1	04/15/25	MR	SW8270E	
1,2-Diphenylhydrazine	ND	370		ug/Kg	1	04/15/25	MR	SW8270E	
1,3-Dichlorobenzene	ND	260		ug/Kg	1	04/15/25	MR	SW8270E	
1,4-Dichlorobenzene	ND	260		ug/Kg	1	04/15/25	MR	SW8270E	
2,2'-Oxybis(1-Chloropropane)	ND	260		ug/Kg	1	04/15/25	MR	SW8270E	1
2,4,5-Trichlorophenol	ND	260		ug/Kg	1	04/15/25	MR	SW8270E	
2,4,6-Trichlorophenol	ND	260		ug/Kg	1	04/15/25	MR	SW8270E	
2,4-Dichlorophenol	ND	260		ug/Kg	1	04/15/25	MR	SW8270E	
2,4-Dimethylphenol	ND	260		ug/Kg	1	04/15/25	MR	SW8270E	
2,4-Dinitrophenol	ND	370		ug/Kg	1	04/15/25	MR	SW8270E	
2,4-Dinitrotoluene	ND	260		ug/Kg	1	04/15/25	MR	SW8270E	
2,6-Dinitrotoluene	ND	260		ug/Kg	1	04/15/25	MR	SW8270E	
2-Chloronaphthalene	ND	260		ug/Kg	1	04/15/25	MR	SW8270E	
2-Chlorophenol	ND	260		ug/Kg	1	04/15/25	MR	SW8270E	
2-Methylnaphthalene	ND	260		ug/Kg	1	04/15/25	MR	SW8270E	
2-Methylphenol (o-cresol)	ND	260		ug/Kg	1	04/15/25	MR	SW8270E	
2-Nitroaniline	ND	370		ug/Kg	1	04/15/25	MR	SW8270E	
2-Nitrophenol	ND	260		ug/Kg	1	04/15/25	MR	SW8270E	
3&4-Methylphenol (m&p-cresol)	ND	370		ug/Kg	1	04/15/25	MR	SW8270E	
3,3'-Dichlorobenzidine	ND	260		ug/Kg	1	04/15/25	MR	SW8270E	
3-Nitroaniline	ND	370		ug/Kg	1	04/15/25	MR	SW8270E	
4,6-Dinitro-2-methylphenol	ND	370		ug/Kg	1	04/15/25	MR	SW8270E	
4-Bromophenyl phenyl ether	ND	370		ug/Kg	1	04/15/25	MR	SW8270E	
4-Chloro-3-methylphenol	ND	260		ug/Kg	1	04/15/25	MR	SW8270E	
4-Chloroaniline	ND	260		ug/Kg	1	04/15/25	MR	SW8270E	
4-Chlorophenyl phenyl ether	ND	260		ug/Kg	1	04/15/25	MR	SW8270E	
4-Nitroaniline	ND	600		ug/Kg	1	04/15/25	MR	SW8270E	
4-Nitrophenol	ND	260		ug/Kg	1	04/15/25	MR	SW8270E	
Acenaphthene	ND	260		ug/Kg	1	04/15/25	MR	SW8270E	
Acenaphthylene	ND	260		ug/Kg	1	04/15/25	MR	SW8270E	
Acetophenone	ND	260		ug/Kg	1	04/15/25	MR	SW8270E	
Aniline	ND	370		ug/Kg	1	04/15/25	MR	SW8270E	
Anthracene	ND	260		ug/Kg	1	04/15/25	MR	SW8270E	
Benz(a)anthracene	ND	260		ug/Kg	1	04/15/25	MR	SW8270E	
Benzidine	ND	260		ug/Kg	1	04/15/25	MR	SW8270E	
Benzo(a)pyrene	ND	260		ug/Kg	1	04/15/25	MR	SW8270E	
Benzo(b)fluoranthene	ND	260		ug/Kg	1	04/15/25	MR	SW8270E	
Benzo(ghi)perylene	ND	260		ug/Kg	1	04/15/25	MR	SW8270E	

Project ID: 9 FIELD CREST DR
Client ID: IMPORT SOIL

Phoenix I.D.: CS98[illegible]

Parameter	Result	RL/ PQL	LOD/ MDL	Units	Dilution	Date/Time	By	Reference
Benzo(k)fluoranthene	ND	260		ug/Kg	1	04/15/25	MR	SW8270E
Benzoic acid	ND	750		ug/Kg	1	04/15/25	MR	SW8270E
Benzyl butyl phthalate	ND	260		ug/Kg	1	04/15/25	MR	SW8270E
Bis(2-chloroethoxy)methane	ND	260		ug/Kg	1	04/15/25	MR	SW8270E
Bis(2-chloroethyl)ether	ND	370		ug/Kg	1	04/15/25	MR	SW8270E
Bis(2-ethylhexyl)phthalate	ND	370		ug/Kg	1	04/15/25	MR	SW8270E
Carbazole	ND	370		ug/Kg	1	04/15/25	MR	SW8270E
Chrysene	ND	260		ug/Kg	1	04/15/25	MR	SW8270E
Dibenz(a,h)anthracene	ND	260		ug/Kg	1	04/15/25	MR	SW8270E
Dibenzofuran	ND	260		ug/Kg	1	04/15/25	MR	SW8270E
Diethyl phthalate	ND	260		ug/Kg	1	04/15/25	MR	SW8270E
Dimethylphthalate	ND	260		ug/Kg	1	04/15/25	MR	SW8270E
Di-n-butylphthalate	ND	370		ug/Kg	1	04/15/25	MR	SW8270E
Di-n-octylphthalate	ND	260		ug/Kg	1	04/15/25	MR	SW8270E
Fluoranthene	ND	260		ug/Kg	1	04/15/25	MR	SW8270E
Fluorene	ND	260		ug/Kg	1	04/15/25	MR	SW8270E
Hexachlorobenzene	ND	260		ug/Kg	1	04/15/25	MR	SW8270E
Hexachlorobutadiene	ND	260		ug/Kg	1	04/15/25	MR	SW8270E
Hexachlorocyclopentadiene	ND	260		ug/Kg	1	04/15/25	MR	SW8270E
Hexachloroethane	ND	260		ug/Kg	1	04/15/25	MR	SW8270E
Indeno(1,2,3-cd)pyrene	ND	260		ug/Kg	1	04/15/25	MR	SW8270E
Isophorone	ND	260		ug/Kg	1	04/15/25	MR	SW8270E
Naphthalene	ND	260		ug/Kg	1	04/15/25	MR	SW8270E
Nitrobenzene	ND	260		ug/Kg	1	04/15/25	MR	SW8270E
N-Nitrosodimethylamine	ND	370		ug/Kg	1	04/15/25	MR	SW8270E
N-Nitrosodi-n-propylamine	ND	260		ug/Kg	1	04/15/25	MR	SW8270E
N-Nitrosodiphenylamine	ND	370		ug/Kg	1	04/15/25	MR	SW8270E
Pentachloronitrobenzene	ND	370		ug/Kg	1	04/15/25	MR	SW8270E
Pentachlorophenol	ND	370		ug/Kg	1	04/15/25	MR	SW8270E
Phenanthrene	ND	260		ug/Kg	1	04/15/25	MR	SW8270E
Phenol	ND	260		ug/Kg	1	04/15/25	MR	SW8270E
Pyrene	ND	260		ug/Kg	1	04/15/25	MR	SW8270E
Pyridine	ND	370		ug/Kg	1	04/15/25	MR	SW8270E
QA/QC Surrogates								
% 2,4,6-Tribromophenol	75			%	1	04/15/25	MR	30 - 130 %
% 2-Fluorobiphenyl	70			%	1	04/15/25	MR	30 - 130 %
% 2-Fluorophenol	63			%	1	04/15/25	MR	30 - 130 %
% Nitrobenzene-d5	69			%	1	04/15/25	MR	30 - 130 %
% Phenol-d5	65			%	1	04/15/25	MR	30 - 130 %
% Terphenyl-d14	73			%	1	04/15/25	MR	30 - 130 %

Additional Semi-Volatile Compounds

1,1-Biphenyl	ND	260	110	ug/Kg	1	04/15/25	MR	SW8270E
1,2,4,5-Tetrachlorobenzene	ND	260	130	ug/Kg	1	04/15/25	MR	SW8270E
Atrazine	ND	150	75	ug/Kg	1	04/15/25	MR	SW8270E
Benzaldehyde	ND	260	110	ug/Kg	1	04/15/25	MR	SW8270E
Benzo(a)pyrene	ND	260	120	ug/Kg	1	04/15/25	MR	SW8270E
Caprolactam	ND	150	150	ug/Kg	1	04/15/25	MR	SW8270E
QA/QC Surrogates								
% 2,4,6-Tribromophenol	75			%	1	04/15/25	MR	30 - 130 %

Project ID: 9 FIELD CREST DR
Client ID: IMPORT SOIL

Phoenix I.D.: CS98[illegible]

Parameter	Result	RL/ PQL	LOD/ MDL	Units	Dilution	Date/Time	By	Reference
% 2-Fluorobiphenyl	70			%	1	04/15/25	MR	30 - 130 %
% 2-Fluorophenol	63			%	1	04/15/25	MR	30 - 130 %
% Nitrobenzene-d5	69			%	1	04/15/25	MR	30 - 130 %
% Phenol-d5	65			%	1	04/15/25	MR	30 - 130 %
% Terphenyl-d14	73			%	1	04/15/25	MR	30 - 130 %

1 = This parameter is not certified by the primary accrediting authority (NY NELAC) for this matrix. NY NELAC does not offer certification for all parameters at this time.

RL/PQL=Reporting/Practical Quantitation Level (Equivalent to NELAC LOQ, Limit of Quantitation) ND=Not Detected at RL/PQL
BRL=Below Reporting Level L=Biased Low LOD=Limit of Detection MDL=Method Detection Limit1
QA/QC Surrogates: Surrogates are compounds (preceeded with a %) added by the lab to determine analysis efficiency. Surrogate results(%) listed in the report are not "detected" compounds.

Comments:

Per 1.4.6 of EPA method 8270D, 1,2-Diphenylhydrazine is unstable and readily converts to Azobenzene. Azobenzene is used for the calibration of 1,2-Diphenylhydrazine.

Please be advised that the NY 375 soil criteria for chromium are based on hexavalent chromium and trivalent chromium.

The regulatory hold time for pH is immediately. This pH was performed in the laboratory and may be considered outside of hold-time.

Hexavalent Chromium:
This sample is in a reducing state.

Volatile Comment:
There was a suppression of the last internal standard in the low level analysis, all affected compounds are reported from the methanol preserved high level analysis which did not exhibit this interference.

All soils, solids and sludges are reported on a dry weight basis unless otherwise noted in the sample comments.

If you are the client above and have any questions concerning this testing, please do not hesitate to contact Phoenix Client Services at ext.200.
The contents of this report cannot be discussed with anyone other than the client listed above without their written consent.

Phyllis Shiller, Laboratory Director
April 18, 2025
Reviewed and Released by: Phyllis Shiller, Laboratory Director

PHOENIX
Environmental Laboratories, Inc.
587 East Middle Turnpike, P.O.Box 370, Manchester, CT 06045
Tel. (860) 645-1102

ACCREDITED IN ACCORDANCE WITH nelac NY # 11301

QA/QC Report

April 18, 2025

QA/QC Data

SDG I.D.: GCS98011

Parameter	Blank	Blk RL	Sample Result	Dup Result	Dup RPD	LCS %	LCSD %	LCS RPD	MS %	MSD %	MS RPD	% Rec Limits	% RPD Limits	
QA/QC Batch 777743 (mg/kg), QC Sample No: CS97364 (CS98011)														
Chromium, Hexavalent - Soil														
Chromium, Hexavalent	BRL	0.40	<0.38	<0.38	NC	99.0						80 - 120	30	
Chromium, Hexavalent (Ins)						97.8			94.9			80 - 120	30	
Chromium, Hexavalent (Sol)						95.7			68.9			80 - 120	30	m

Comment:

The QC sample is in a reducing state, acceptance criteria are not applicable for samples in a reducing state. The soluble spike was analyzed twice with similar recoveries.

Additional Hexavalent Chromium criteria: MS acceptance range is 75-125%.

QA/QC Batch 778357 (mg/kg), QC Sample No: CS99441 (CS98011)														
Mercury - Soil	BRL	0.2	<0.22	<0.22	NC	97.6			86.0			70 - 130	30	

Comment:

Additional Mercury Criteria: LCS acceptance range is 80-120% for aqueous and for soils the acceptance range is set by vendor limits. MS acceptance range is 75-125% for aqueous and 80-120% for soils.

QA/QC Batch 777840 (mg/kg), QC Sample No: CS97345 (CS98011)														
ICP Metals - Soil														
Arsenic	BRL	0.67	5.43	9.05	50.0	94.4	98.1	3.8	91.2			75 - 125	30	r
Barium	BRL	0.33	140	161	14.0	97.2	107	9.6	NC			75 - 125	30	
Beryllium	BRL	0.27	0.81	0.79	NC	102	109	6.6	97.1			75 - 125	30	
Cadmium	BRL	0.33	0.62	0.77	NC	98.7	104	5.2	92.6			75 - 125	30	
Chromium	BRL	0.33	43.7	43.3	0.90	100	106	5.8	85.1			75 - 125	30	
Copper	BRL	0.67	49.7	69.9	33.8	104	110	5.6				75 - 125	30	r
Lead	BRL	0.33	49.1	76.7	43.9	104	107	2.8	NC			75 - 125	30	r
Manganese	BRL	0.33	426	570	28.9	111	113	1.8	42.0			75 - 125	30	m
Nickel	BRL	0.33	26.0	29.4	12.3	101	107	5.8	92.1			75 - 125	30	
Selenium	BRL	1.3	<1.7	<1.5	NC	84.0	88.1	4.8	77.6			75 - 125	30	
Silver	BRL	0.33	<0.41	<0.36	NC	105	108	2.8	98.7			75 - 125	30	
Zinc	BRL	0.67	166	333	66.9	102	107	4.8	NC			75 - 125	30	r

Comment:

Additional Criteria: LCS acceptance range is 80-120% for aqueous and for soils the acceptance range is set by vendor limits. MS acceptance range 75-125%.

m = This parameter is outside laboratory MS/MSD specified recovery limits.
r = This parameter is outside laboratory RPD specified recovery limits.

PHOENIX
Environmental Laboratories, Inc.
587 East Middle Turnpike, P.O.Box 370, Manchester, CT 06045
Tel. (860) 645-1102

ACCREDITED IN ACCORDANCE WITH nelac NY # 11301

QA/QC Report

April 18, 2025

QA/QC Data

SDG I.D.: GCS98011

Parameter	Blank	Blk RL	Sample Result	Dup Result	Dup RPD	LCS %	LCSD %	LCS RPD	MS %	MSD %	MS RPD	% Rec Limits	% RPD Limits
QA/QC Batch 777786 (mg/Kg), QC Sample No: CS96979 (CS98011)													
Total Cyanide (SW9010C Distill.)	BRL	0.50	<0.72	0.78	NC	102	89.0	13.6	96.0			80 - 120	30
Comment:													
Additional: MS acceptance range is 75-125%.													
QA/QC Batch 777721 (PH), QC Sample No: CS97801 (CS98011)													
pH			5.02	5.04	0.40	99.9						85 - 115	20

PHOENIX
Environmental Laboratories, Inc.
587 East Middle Turnpike, P.O.Box 370, Manchester, CT 06045
Tel. (860) 645-1102

ACCREDITED IN ACCORDANCE WITH nelac NY # 11301

QA/QC Report

April 18, 2025

QA/QC Data

SDG I.D.: GCS98011

Parameter	Blank	Blk RL	LCS %	LCSD %	LCS RPD	MS %	MSD %	MS RPD	% Rec Limits	% RPD Limits
QA/QC Batch 778548 (ug/Kg), QC Sample No: CS96248 (CS98011)										
Chlorinated Herbicides - Soil										
2,4,5-T	ND	130	53	48	9.9	34	42	21.1	40 - 140	30
2,4,5-TP (Silvex)	ND	130	56	54	3.6	40	48	18.2	40 - 140	30
2,4-D	ND	250	59	54	8.8	45	54	18.2	40 - 140	30
2,4-DB	ND	2500	44	37	17.3	31	39	22.9	40 - 140	30
Dalapon	ND	130	55	53	3.7	41	40	2.5	40 - 140	30
Dicamba	ND	130	56	56	0.0	41	47	13.6	40 - 140	30
Dichloroprop	ND	130	61	56	8.5	45	53	16.3	40 - 140	30
Dinoseb	ND	130	53	49	7.8	37	43	15.0	40 - 140	30
% DCAA (Surrogate Rec)	69	%	69	63	9.1	53	62	15.7	30 - 150	30
% DCAA (Surrogate Rec) (Confirm	66	%	65	59	9.7	50	59	16.5	30 - 150	30

Comment:

8151 additional criteria: (LCS/LCSD)10% of compounds can be outside of acceptance criteria as long as recovery is at least 10%. LCS acceptance range is 40-140% MS acceptance range 30-150%.

QA/QC Batch 779340 (ug/Kg), QC Sample No: CS98021 2X (CS98011)										
Polychlorinated Biphenyls - Soil										
PCB-1016	ND	33	72	71	1.4	66	62	6.3	40 - 140	30
PCB-1221	ND	33							40 - 140	30
PCB-1232	ND	33							40 - 140	30
PCB-1242	ND	33							40 - 140	30
PCB-1248	ND	33							40 - 140	30
PCB-1254	ND	33							40 - 140	30
PCB-1260	ND	33	71	67	5.8	64	59	8.1	40 - 140	30
PCB-1262	ND	33							40 - 140	30
PCB-1268	ND	33							40 - 140	30
% DCBP (Surrogate Rec)	64	%	82	73	11.6	70	64	9.0	30 - 150	30
% DCBP (Surrogate Rec) (Confirm	66	%	83	76	8.8	72	68	5.7	30 - 150	30
% TCMX (Surrogate Rec)	57	%	72	73	1.4	66	60	9.5	30 - 150	30
% TCMX (Surrogate Rec) (Confirm	61	%	80	81	1.2	74	67	9.9	30 - 150	30
QA/QC Batch 779341 (ug/Kg), QC Sample No: CS98021 2X (CS98011)										
Pesticides - Soil										
4,4' -DDD	ND	1.7	60	60	0.0	50	60	18.2	40 - 140	30
4,4' -DDE	ND	1.7	66	67	1.5	55	65	16.7	40 - 140	30
4,4' -DDT	ND	1.7	60	61	1.7	49	62	23.4	40 - 140	30
a-BHC	ND	1.0	61	62	1.6	48	61	23.9	40 - 140	30
a-Chlordane	ND	3.3	63	63	0.0	53	68	24.8	40 - 140	30
Aldrin	ND	1.0	68	70	2.9	56	62	10.2	40 - 140	30
b-BHC	ND	1.0	66	65	1.5	55	64	15.1	40 - 140	30
Chlordane	ND	33	62	63	1.6	58	67	14.4	40 - 140	30
d-BHC	ND	3.3	66	66	0.0	54	70	25.8	40 - 140	30
Dieldrin	ND	1.0	65	66	1.5	54	65	18.5	40 - 140	30

QA/QC Data

SDG I.D.: GCS98011

Parameter	Blank	Blk RL	LCS %	LCSD %	LCS RPD	MS %	MSD %	MS RPD	% Rec Limits	% RPD Limits	
Endosulfan I	ND	3.3	66	67	1.5	54	63	15.4	40 - 140	30	
Endosulfan II	ND	3.3	70	71	1.4	57	67	16.1	40 - 140	30	
Endosulfan sulfate	ND	3.3	69	70	1.4	56	67	17.9	40 - 140	30	
Endrin	ND	3.3	68	69	1.5	56	65	14.9	40 - 140	30	
Endrin aldehyde	ND	3.3	66	68	3.0	56	58	3.5	40 - 140	30	
Endrin ketone	ND	3.3	70	66	5.9	52	64	20.7	40 - 140	30	
g-BHC	ND	1.0	70	69	1.4	56	69	20.8	40 - 140	30	
g-Chlordane	ND	3.3	62	63	1.6	58	67	14.4	40 - 140	30	
Heptachlor	ND	3.3	66	66	0.0	55	58	5.3	40 - 140	30	
Heptachlor epoxide	ND	3.3	62	73	16.3	52	61	15.9	40 - 140	30	
Methoxychlor	ND	3.3	65	60	8.0	49	56	13.3	40 - 140	30	
Toxaphene	ND	130	NA	NA	NC	NA	NA	NC	40 - 140	30	
% DCBP	54	%	51	49	4.0	40	58	36.7	30 - 150	30	r
% DCBP (Confirmation)	58	%	56	54	3.6	44	50	12.8	30 - 150	30	
% TCMX	64	%	62	61	1.6	50	62	21.4	30 - 150	30	
% TCMX (Confirmation)	62	%	62	62	0.0	57	57	0.0	30 - 150	30	

Comment:

8081 additional criteria: (LCS/LCSD)10% of compounds can be outside of acceptance criteria as long as recovery is at least 10%. LCS acceptance range is 40-140% MS acceptance range 30-150%.

QA/QC Batch 779342 (ug/kg), QC Sample No: CS98176 (CS98011)

Semivolatiles - Soil

1,1-Biphenyl	ND	230	61	62	1.6	50	53	5.8	40 - 140	30	
1,2,4,5-Tetrachlorobenzene	ND	230	57	60	5.1	43	52	18.9	40 - 140	30	
1,2,4-Trichlorobenzene	ND	230	59	60	1.7	41	53	25.5	40 - 140	30	
1,2-Dichlorobenzene	ND	180	59	61	3.3	45	53	16.3	40 - 140	30	
1,2-Diphenylhydrazine	ND	230	64	66	3.1	53	55	3.7	40 - 140	30	
1,3-Dichlorobenzene	ND	230	58	58	0.0	43	51	17.0	40 - 140	30	
1,4-Dichlorobenzene	ND	230	58	58	0.0	43	49	13.0	40 - 140	30	
2,2'-Oxybis(1-Chloropropane)	ND	230	50	52	3.9	39	45	14.3	40 - 140	30	m
2,4,5-Trichlorophenol	ND	230	65	68	4.5	54	59	8.8	40 - 140	30	
2,4,6-Trichlorophenol	ND	130	62	67	7.8	53	54	1.9	30 - 130	30	
2,4-Dichlorophenol	ND	130	60	63	4.9	45	55	20.0	30 - 130	30	
2,4-Dimethylphenol	ND	230	60	65	8.0	45	53	16.3	30 - 130	30	
2,4-Dinitrophenol	ND	230	69	72	4.3	55	61	10.3	30 - 130	30	
2,4-Dinitrotoluene	ND	130	68	70	2.9	57	59	3.4	30 - 130	30	
2,6-Dinitrotoluene	ND	130	70	73	4.2	62	62	0.0	40 - 140	30	
2-Chloronaphthalene	ND	230	62	63	1.6	53	56	5.5	40 - 140	30	
2-Chlorophenol	ND	230	61	63	3.2	49	53	7.8	30 - 130	30	
2-Methylnaphthalene	ND	230	59	62	5.0	44	52	16.7	40 - 140	30	
2-Methylphenol (o-cresol)	ND	230	70	74	5.6	57	61	6.8	40 - 140	30	
2-Nitroaniline	ND	330	124	132	6.3	104	103	1.0	40 - 140	30	
2-Nitrophenol	ND	230	62	65	4.7	45	58	25.2	40 - 140	30	
3&4-Methylphenol (m&p-cresol)	ND	230	69	72	4.3	57	60	5.1	30 - 130	30	
3,3'-Dichlorobenzidine	ND	130	75	79	5.2	63	65	3.1	40 - 140	30	
3-Nitroaniline	ND	330	80	85	6.1	65	69	6.0	40 - 140	30	
4,6-Dinitro-2-methylphenol	ND	230	73	77	5.3	60	62	3.3	30 - 130	30	
4-Bromophenyl phenyl ether	ND	230	62	66	6.3	54	55	1.8	40 - 140	30	
4-Chloro-3-methylphenol	ND	230	64	69	7.5	51	57	11.1	30 - 130	30	
4-Chloroaniline	ND	230	50	57	13.1	38	45	16.9	40 - 140	30	m
4-Chlorophenyl phenyl ether	ND	230	62	65	4.7	53	53	0.0	40 - 140	30	
4-Nitroaniline	ND	230	68	71	4.3	58	60	3.4	40 - 140	30	
4-Nitrophenol	ND	230	22	71	105.4	53	55	3.7	30 - 130	30	l,r

QA/QC Data

SDG I.D.: GCS98011

Parameter	Blank	Blk RL	LCS %	LCSD %	LCS RPD	MS %	MSD %	MS RPD	% Rec Limits	% RPD Limits	
Acenaphthene	ND	230	63	64	1.6	54	56	3.6	30 - 130	30	
Acenaphthylene	ND	130	57	58	1.7	47	49	4.2	40 - 140	30	
Acetophenone	ND	230	58	60	3.4	47	51	8.2	40 - 140	30	
Aniline	ND	330	51	56	9.3	40	46	14.0	40 - 140	30	
Anthracene	ND	230	62	65	4.7	54	57	5.4	40 - 140	30	
Atrazine	ND	130	54	58	7.1	48	47	2.1	40 - 140	30	
Benz(a)anthracene	ND	230	63	67	6.2	56	57	1.8	40 - 140	30	
Benzaldehyde	ND	230	124	130	4.7	40	89	76.0	40 - 140	30	r
Benzidine	ND	330	60	74	20.9	36	35	2.8	40 - 140	30	m
Benzo(a)pyrene	ND	130	64	67	4.6	56	57	1.8	40 - 140	30	
Benzo(b)fluoranthene	ND	160	65	69	6.0	56	58	3.5	40 - 140	30	
Benzo(ghi)perylene	ND	230	65	69	6.0	57	57	0.0	40 - 140	30	
Benzo(k)fluoranthene	ND	230	63	66	4.7	55	54	1.8	40 - 140	30	
Benzoic Acid	ND	670	76	80	5.1	49	56	13.3	30 - 130	30	
Benzyl butyl phthalate	ND	230	71	76	6.8	57	58	1.7	40 - 140	30	
Bis(2-chloroethoxy)methane	ND	230	59	62	5.0	43	53	20.8	40 - 140	30	
Bis(2-chloroethyl)ether	ND	130	59	60	1.7	44	52	16.7	40 - 140	30	
Bis(2-ethylhexyl)phthalate	ND	230	69	74	7.0	NC	NC	NC	40 - 140	30	
Caprolactam	ND	230	60	65	8.0	47	55	15.7	40 - 140	30	
Carbazole	ND	230	61	65	6.3	54	54	0.0	40 - 140	30	
Chrysene	ND	230	63	68	7.6	56	57	1.8	40 - 140	30	
Dibenz(a,h)anthracene	ND	130	67	70	4.4	58	59	1.7	40 - 140	30	
Dibenzofuran	ND	230	63	65	3.1	54	55	1.8	40 - 140	30	
Diethyl phthalate	ND	230	67	69	2.9	57	58	1.7	40 - 140	30	
Dimethylphthalate	ND	230	63	65	3.1	55	56	1.8	40 - 140	30	
Di-n-butylphthalate	ND	670	71	76	6.8	60	63	4.9	40 - 140	30	
Di-n-octylphthalate	ND	230	74	80	7.8	64	66	3.1	40 - 140	30	
Fluoranthene	ND	230	63	67	6.2	56	56	0.0	40 - 140	30	
Fluorene	ND	230	65	66	1.5	56	57	1.8	40 - 140	30	
Hexachlorobenzene	ND	130	62	71	13.5	57	56	1.8	40 - 140	30	
Hexachlorobutadiene	ND	230	61	59	3.3	40	52	26.1	40 - 140	30	
Hexachlorocyclopentadiene	ND	230	45	43	4.5	34	41	18.7	40 - 140	30	m
Hexachloroethane	ND	130	59	60	1.7	44	52	16.7	40 - 140	30	
Indeno(1,2,3-cd)pyrene	ND	230	64	69	7.5	57	56	1.8	40 - 140	30	
Isophorone	ND	130	57	60	5.1	43	51	17.0	40 - 140	30	
Naphthalene	ND	230	64	65	1.6	44	57	25.7	40 - 140	30	
Nitrobenzene	ND	130	63	64	1.6	49	55	11.5	40 - 140	30	
N-Nitrosodimethylamine	ND	230	58	60	3.4	44	51	14.7	40 - 140	30	
N-Nitrosodi-n-propylamine	ND	130	60	63	4.9	48	53	9.9	40 - 140	30	
N-Nitrosodiphenylamine	ND	130	64	67	4.6	54	55	1.8	40 - 140	30	
Pentachloronitrobenzene	ND	230	62	66	6.3	53	56	5.5	40 - 140	30	
Pentachlorophenol	ND	230	58	63	8.3	45	50	10.5	30 - 130	30	
Phenanthrene	ND	130	62	65	4.7	54	57	5.4	40 - 140	30	
Phenol	ND	230	65	68	4.5	53	58	9.0	30 - 130	30	
Pyrene	ND	230	63	67	6.2	56	56	0.0	30 - 130	30	
Pyridine	ND	230	48	49	2.1	34	43	23.4	40 - 140	30	m
% 2,4,6-Tribromophenol	49	%	60	66	9.5	54	54	0.0	30 - 130	30	
% 2-Fluorobiphenyl	51	%	59	60	1.7	50	53	5.8	30 - 130	30	
% 2-Fluorophenol	46	%	57	60	5.1	44	51	14.7	30 - 130	30	
% Nitrobenzene-d5	49	%	57	60	5.1	46	51	10.3	30 - 130	30	
% Phenol-d5	47	%	55	58	5.3	47	50	6.2	30 - 130	30	
% Terphenyl-d14	49	%	57	62	8.4	51	51	0.0	30 - 130	30	

QA/QC Data

SDG I.D.: GCS98011

Comment:

Additional 8270 criteria: 10% of compounds can be outside of acceptance criteria as long as recovery is at least 10%. (Acid surrogates acceptance range for aqueous samples: 15-110%, for soils 30-130%)

QA/QC Batch 778240 (ug/kg), QC Sample No: CS98561 (CS98011)

Volatiles - Soil (Low Level)

Parameter	Blank	Blk RL	LCS %	LCSD %	LCS RPD	MS %	MSD %	MS RPD	% Rec Limits	% RPD Limits	
1,1,1,2-Tetrachloroethane	ND	5.0	124	118	5.0	97	101	4.0	70 - 130	20	
1,1,1-Trichloroethane	ND	5.0	109	108	0.9	92	97	5.3	70 - 130	20	
1,1,2-Trichloroethane	ND	5.0	107	101	5.8	85	88	3.5	70 - 130	20	
1,1-Dichloroethane	ND	5.0	104	103	1.0	90	91	1.1	70 - 130	20	
1,1-Dichloroethene	ND	5.0	106	110	3.7	94	96	2.1	70 - 130	20	
1,1-Dichloropropene	ND	5.0	111	107	3.7	91	94	3.2	70 - 130	20	
1,2-Dibromoethane	ND	5.0	109	106	2.8	88	92	4.4	70 - 130	20	
1,2-Dichloroethane	ND	5.0	114	111	2.7	90	92	2.2	70 - 130	20	
1,2-Dichloropropane	ND	5.0	114	109	4.5	92	94	2.2	70 - 130	20	
1,3-Dichloropropane	ND	5.0	108	106	1.9	89	92	3.3	70 - 130	20	
1,4-dioxane	ND	100	103	101	2.0	100	91	9.4	70 - 130	20	
2,2-Dichloropropane	ND	5.0	114	114	0.0	89	94	5.5	70 - 130	20	
2-Hexanone	ND	25	99	95	4.1	76	84	10.0	70 - 130	20	
4-Methyl-2-pentanone	ND	25	102	100	2.0	80	89	10.7	70 - 130	20	
Acetone	ND	10	89	87	2.3	73	78	6.6	70 - 130	20	
Acrolein	ND	25	96	98	2.1	48	55	13.6	70 - 130	20	m
Acrylonitrile	ND	5.0	94	93	1.1	78	83	6.2	70 - 130	20	
Benzene	ND	1.0	109	105	3.7	88	91	3.4	70 - 130	20	
Bromochloromethane	ND	5.0	101	98	3.0	84	90	6.9	70 - 130	20	
Bromodichloromethane	ND	5.0	115	110	4.4	92	94	2.2	70 - 130	20	
Bromoform	ND	5.0	119	114	4.3	89	95	6.5	70 - 130	20	
Bromomethane	ND	5.0	107	107	0.0	95	93	2.1	70 - 130	20	
Carbon Disulfide	ND	5.0	106	108	1.9	90	94	4.3	70 - 130	20	
Carbon tetrachloride	ND	5.0	112	113	0.9	92	97	5.3	70 - 130	20	
Chlorobenzene	ND	5.0	116	111	4.4	91	96	5.3	70 - 130	20	
Chloroethane	ND	5.0	112	114	1.8	97	99	2.0	70 - 130	20	
Chloroform	ND	5.0	101	101	0.0	87	88	1.1	70 - 130	20	
Chloromethane	ND	5.0	107	106	0.9	94	96	2.1	70 - 130	20	
cis-1,2-Dichloroethene	ND	5.0	103	101	2.0	86	90	4.5	70 - 130	20	
cis-1,3-Dichloropropene	ND	5.0	119	114	4.3	88	92	4.4	70 - 130	20	
Dibromochloromethane	ND	3.0	120	113	6.0	92	96	4.3	70 - 130	20	
Dibromomethane	ND	5.0	114	111	2.7	88	92	4.4	70 - 130	20	
Dichlorodifluoromethane	ND	5.0	130	131	0.8	108	111	2.7	70 - 130	20	l
Ethylbenzene	ND	1.0	113	108	4.5	92	98	6.3	70 - 130	20	
m&p-Xylene	ND	2.0	110	106	3.7	89	94	5.5	70 - 130	20	
Methyl ethyl ketone	ND	5.0	76	76	0.0	60	66	9.5	70 - 130	20	m
Methyl t-butyl ether (MTBE)	ND	1.0	120	115	4.3	89	103	14.6	70 - 130	20	
Methylacetate	ND	5.0	98	98	0.0	95	103	8.1	70 - 130	20	
Methylene chloride	ND	5.0	104	103	1.0	89	91	2.2	70 - 130	20	
o-Xylene	ND	2.0	111	106	4.6	90	93	3.3	70 - 130	20	
Styrene	ND	5.0	110	105	4.7	79	87	9.6	70 - 130	20	
tert-butyl alcohol	ND	100	101	90	11.5	95	81	15.9	70 - 130	20	
Tetrachloroethene	ND	5.0	113	110	2.7	89	93	4.4	70 - 130	20	
Tetrahydrofuran (THF)	ND	5.0	93	94	1.1	79	85	7.3	70 - 130	20	
Toluene	ND	1.0	105	102	2.9	83	87	4.7	70 - 130	20	
trans-1,2-Dichloroethene	ND	5.0	108	109	0.9	91	92	1.1	70 - 130	20	
trans-1,3-Dichloropropene	ND	5.0	125	120	4.1	88	93	5.5	70 - 130	20	

QA/QC Data

SDG I.D.: GCS98011

Parameter	Blank	Blk RL	LCS %	LCSD %	LCS RPD	MS %	MSD %	MS RPD	% Rec Limits	% RPD Limits
Trichloroethene	ND	5.0	110	109	0.9	90	94	4.3	70 - 130	20
Trichlorofluoromethane	ND	5.0	113	115	1.8	99	101	2.0	70 - 130	20
Trichlorotrifluoroethane	ND	5.0	107	109	1.9	92	98	6.3	70 - 130	20
Vinyl chloride	ND	5.0	114	114	0.0	98	100	2.0	70 - 130	20
% 1,2-dichlorobenzene-d4	102	%	110	109	0.9	108	107	0.9	70 - 130	20
% Bromofluorobenzene	103	%	103	102	1.0	98	99	1.0	70 - 130	20
% Dibromofluoromethane	100	%	102	101	1.0	104	101	2.9	70 - 130	20
% Toluene-d8	94	%	105	105	0.0	103	103	0.0	70 - 130	20

Comment:

Additional 8260 criteria: 10% of LCS/LCSD compounds can be outside of acceptance criteria as long as recovery is 40-160%.

QA/QC Batch 778527H (ug/kg), QC Sample No: CS99679 50X (CS98011 (50X))

Volatiles - Soil (High Level)

1,1,2,2-Tetrachloroethane	ND	250	88	90	2.2	88	98	10.8	70 - 130	20
1,2,3-Trichlorobenzene	ND	250	105	104	1.0	97	110	12.6	70 - 130	20
1,2,3-Trichloropropane	ND	250	86	84	2.4	85	94	10.1	70 - 130	20
1,2,4-Trichlorobenzene	ND	250	105	105	0.0	95	106	10.9	70 - 130	20
1,2,4-Trimethylbenzene	ND	250	101	103	2.0	100	105	4.9	70 - 130	20
1,2-Dibromo-3-chloropropane	ND	250	84	83	1.2	78	90	14.3	70 - 130	20
1,2-Dichlorobenzene	ND	250	100	101	1.0	99	109	9.6	70 - 130	20
1,3,5-Trimethylbenzene	ND	250	101	101	0.0	99	105	5.9	70 - 130	20
1,3-Dichlorobenzene	ND	250	98	100	2.0	96	105	9.0	70 - 130	20
1,4-Dichlorobenzene	ND	250	100	99	1.0	97	104	7.0	70 - 130	20
2-Chlorotoluene	ND	250	100	100	0.0	100	107	6.8	70 - 130	20
2-Isopropyltoluene	ND	250	104	106	1.9	104	111	6.5	70 - 130	20
4-Chlorotoluene	ND	250	100	102	2.0	97	105	7.9	70 - 130	20
Bromobenzene	ND	250	100	103	3.0	101	109	7.6	70 - 130	20
Hexachlorobutadiene	ND	250	113	112	0.9	101	113	11.2	70 - 130	20
Isopropylbenzene	ND	250	100	104	3.9	100	106	5.8	70 - 130	20
Naphthalene	ND	250	100	100	0.0	99	111	11.4	70 - 130	20
n-Butylbenzene	ND	250	109	111	1.8	106	113	6.4	70 - 130	20
n-Propylbenzene	ND	250	103	105	1.9	102	108	5.7	70 - 130	20
p-Isopropyltoluene	ND	250	102	105	2.9	101	106	4.8	70 - 130	20
sec-Butylbenzene	ND	250	102	105	2.9	102	108	5.7	70 - 130	20
tert-Butylbenzene	ND	250	102	104	1.9	99	107	7.8	70 - 130	20
trans-1,4-dichloro-2-butene	ND	250	90	88	2.2	78	91	15.4	70 - 130	20
% 1,2-dichlorobenzene-d4	94	%	102	104	1.9	100	102	2.0	70 - 130	20
% Bromofluorobenzene	103	%	100	100	0.0	103	99	4.0	70 - 130	20
% Dibromofluoromethane	91	%	91	97	6.4	93	97	4.2	70 - 130	20
% Toluene-d8	91	%	102	103	1.0	100	103	3.0	70 - 130	20

Comment:

Additional 8260 criteria: 10% of LCS/LCSD compounds can be outside of acceptance criteria as long as recovery is 40-160%.

l = This parameter is outside laboratory LCS/LCSD specified recovery limits.
m = This parameter is outside laboratory MS/MSD specified recovery limits.
r = This parameter is outside laboratory RPD specified recovery limits.

QA/QC Data

SDG I.D.: GCS98011

Parameter	Blank	Blk RL	LCS %	LCSD %	LCS RPD	MS %	MSD %	MS RPD	% Rec Limits	% RPD Limits

If there are any questions regarding this data, please call Phoenix Client Services at extension 200.

RPD - Relative Percent Difference
LCS - Laboratory Control Sample
LCSD - Laboratory Control Sample Duplicate
MS - Matrix Spike
MS Dup - Matrix Spike Duplicate
NC - No Criteria
Intf - Interference
(ISO) - Isotope Dilution

Phyllis Shiller, Laboratory Director
April 18, 2025

Friday, April 18, 2025

Criteria: NY: 375GWP, 375RS

State: NY

Sample Criteria Exceedances Report

GCS98011 - TAYLORD

SampNo	Acode	Phoenix Analyte	Criteria	Result	RL	Criteria	RL Criteria	Analysis Units

*** No Data to Display ***

Phoenix Laboratories does not assume responsibility for the data contained in this exceedance report. It is provided as an additional tool to identify requested criteria exceedences. All efforts are made to ensure the accuracy of the data (obtained from appropriate agencies). A lack of exceedence information does not necessarily suggest conformance to the criteria. It is ultimately the site professional's responsibility to determine appropriate compliance.

PHOENIX

Environmental Laboratories, Inc.
587 East Middle Turnpike, P.O.Box 370, Manchester, CT 06045
Tel. (860) 645-1102 Fax (860) 645-0823

ACCREDITED IN ACCORDANCE WITH nelac NY # 11301

Analysis Comments

April 18, 2025 SDG I.D.: GCS98011

The following analysis comments are made regarding exceptions to criteria not already noted in the Analysis Report or QA/QC Report:

SVOA Narration

CHEM06 04/14/25-2: CS98011

For 8270 full list, the DDT breakdown and pentachlorophenol & benzidine peak tailing were evaluated in the DFTPP tune and were found to be in control.
For 8270 BN list, benzidine peak tailing was evaluated in the DFTPP tune and was found to be in control.

The following Initial Calibration compounds did not meet recommended response factors: 2-Nitrophenol 0.073 (0.1)
The following Initial Calibration compounds did not meet minimum response factors: None.

The following Continuing Calibration compounds did not meet recommended response factors: 2-Nitrophenol 0.078 (0.1)
The following Continuing Calibration compounds did not meet minimum response factors: None.

Up to eight compounds can be outside of ICAL %RSD criteria and up to sixteen compounds can be outside of CCAL %Dev criteria if less than 40%.

VOA Narration

CHEM18 04/05/25-1: CS98011

The following Initial Calibration compounds did not meet RSD% criteria: Acetone 29% (20%), Methyl Ethyl Ketone 40% (20%), trans-1,3-Dichloropropene 21% (20%)
The following Initial Calibration compounds did not meet maximum RSD% criteria: None.
The following Initial Calibration compounds did not meet recommended response factors: Bromoform 0.096 (0.1)
The following Initial Calibration compounds did not meet minimum response factors: None.

The following Continuing Calibration compounds did not meet % deviation criteria: Methyl Ethyl Ketone 26%L (20%)
The following Continuing Calibration compounds did not meet Maximum % deviation criteria: None.

Up to eight compounds can be outside of ICAL %RSD criteria and up to sixteen compounds can be outside of CCAL %Dev criteria if less than 40%.

CHEM18 04/08/25-1: CS98011

The following Initial Calibration compounds did not meet RSD% criteria: trans-1,4-dichloro-2-butene 23% (20%)
The following Initial Calibration compounds did not meet maximum RSD% criteria: None.

Up to eight compounds can be outside of ICAL %RSD criteria and up to sixteen compounds can be outside of CCAL %Dev criteria if less than 40%.

Environmental Laboratories, Inc.
587 East Middle Turnpike, P.O.Box 370, Manchester, CT 06045
Tel. (860) 645-1102 Fax (860) 645-0823

ACCREDITED IN ACCORDANCE WITH nelac NY # 11301

NY Temperature Narration

April 18, 2025

SDG I.D.: GCS98011

The samples in this delivery group were received at 2.9°C.
(Note acceptance criteria for relevant matrices is above freezing up to 6°C)

Cooler: Yes [x] No [ ]
Coolant: IPK [x] ICE [ ] No [ ]
Temp 2.4 °C Pg 2 of 2

PHOENIX Environmental Laboratories, Inc.

NY/NJ CHAIN OF CUSTODY RECORD

587 East Middle Turnpike, P.O. Box 370, Manchester, CT 06040
Email: info@phoenixlabs.com Fax (860) 645-0823
Client Services (860) 645-8726

Contact Options:
[ ] Fax:
[ ] Phone:
[x] Email: scott@taylordenvironment.com

Customer: Taylord Environment, Inc.
Address: PO Box 613
Wingdale, NY
scott@taylordenvironment.com

Project: 9 Field Crest Dr
Monsey, NY

Project P.O:

This section MUST be completed with Bottle Quantities.

Sampler's Signature: [signature]

Client Sample - Information - Identification
Date: 4/25/25

Matrix Code:
DW=Drinking Water **GW**=Ground Water **SW**=Surface Water **WW**=Waste Water **RW**=Raw Water
SE=Sediment **SL**=Sludge **S**=Soil **SD**=Solid **W**=Wipe **OIL**=Oil **B**=Bulk **L**=Liquid

PHOENIX USE ONLY SAMPLE #	Customer Sample Identification	Sample Matrix			PART 375-DER10	Soil VOA Vials [1] methanol [2] H2O	GL Soil container (8) oz	GL Soil container (4) oz	40 ml VOA Vial [ ] As is [ ] HCl	GL Amber 1000ml [ ] As is [ ] H2SO4	PL As is [X] 250ml [ ] 500ml [ ] 1000ml	PL H2SO4 [ ] 250ml [ ] 500ml	PL HNO3 250ml	PL NaOH 250ml	Bacteria Bottle
98011	Import Soil	s	4/2/25		X	3	1								

Relinquished by:	Accepted by:	Date:	Time:
[signature]	[signature]	4.3.25	900
[signature]	[signature]	4.3.25	16:00
[signature]		4/3/25	1730

Comments, Special Requirements or Regulations:

Please report below the regulator standards

Turnaround:
1 Day*
2 Days*
[ ] 3 Days*
[ ] 5 Days
[ ] 10 Days
[ ] Other
* SURCHARGE APPLIES

NJ
[ ] Res. Criteria
[ ] Non-Res. Criteria
[ ] Impact to GW Soil Cleanup Criteria
[ ] GW Criteria

NY
[x] NY 375 GWP
[ ] NY375 Unrestricted Use Soil
[x] NY375 Residential
[ ] Restricted/Residential
[ ] Commercial
[ ] Industrial

Data Format
[ ] Phoenix Std Report
[x] Excel
[x] PDF
[ ] GIS/Key
[ ] EQuIS
[ ] NJ Hazsite EDD
[ ] NY EZ EDD (ASP)
[ ] Other

Data Package
[ ] NJ Reduced Deliv. *
[ ] NY Enhanced (ASP B)*
[ ] Other

State where samples were collected: NY

Note: VOC SAMPLES ARE dicrete GRAB SAMPLES, COMPOSITE SAMPLES ARE FIVE POINT COMPOSITES SAMPLES

Phoenix Environmental Laboratories, Inc.
587 East Middle Turnpike
P.O. Box 370
Manchester, CT 06040
(860) 645-1102

Project Id : 9 FIELD CREST DR

	Lab Sample Id				CS98011	
	Collection Date				4/2/2025	
	Client Id				IMPORT SOIL	
	Matrix				Soil	
	CAS	Units	NY-GWP	NY-Res.	Result	RL
Miscellaneous/Inorganics						
Percent Solid	PHNX - PCTSOLID	%			88	
Chromium, Hex. (SW3060A digestion)	18540-29-9	mg/Kg	19	22	< 0.42	0.42
Methylacetate	79-20-9	ug/Kg			< 4.6	4.6
pH at 21C - Soil	PHNX - PH	pH Units			8.04	1.00
Redox Potential	PHNX - REDOX	mV			186	
Total Cyanide (SW9010C Distill.)	57-12-5	mg/Kg	40	27	< 0.57	0.57
Metals, Total						
Arsenic	7440-38-2	mg/Kg	16	16	3.41	0.71
Barium	7440-39-3	mg/Kg	820	350	43.9	0.36
Beryllium	7440-41-7	mg/Kg	47	14	0.39	0.28
Cadmium	7440-43-9	mg/Kg	7.5	2.5	< 0.36	0.36
Chromium	7440-47-3	mg/Kg			15	0.36
Copper	7440-50-8	mg/kg	1,720	270	19.9	0.7
Lead	7439-92-1	mg/Kg	450	400	18.6	0.36
Manganese	7439-96-5	mg/Kg	2,000	2,000	317	0.36
Mercury	7439-97-6	mg/Kg	0.73	0.81	< 0.23	0.23
Nickel	7440-02-0	mg/Kg	130	140	11.9	0.36
Selenium	7782-49-2	mg/Kg	4	36	< 1.4	1.4
Silver	7440-22-4	mg/Kg	8.3	36	< 0.36	0.36
Trivalent Chromium	16065-83-1	mg/kg		36	15	0.36
Zinc	7440-66-6	mg/Kg	2,480	2,200	37.5	0.7
PCBs By SW8082A						

PCB-1016	12674-11-2	ug/Kg		1,000	< 380	380
PCB-1221	11104-28-2	ug/Kg		1,000	< 380	380
PCB-1232	11141-16-5	ug/Kg		1,000	< 380	380
PCB-1242	53469-21-9	ug/Kg		1,000	< 380	380
PCB-1248	12672-29-6	ug/Kg		1,000	< 380	380
PCB-1254	11097-69-1	ug/Kg		1,000	< 380	380
PCB-1260	11096-82-5	ug/Kg		1,000	< 380	380
PCB-1262	37324-23-5	ug/Kg			< 380	380
PCB-1268	11100-14-4	ug/Kg			< 380	380
Volatiles By SW8260D						
1,1,1,2-Tetrachloroethane	630-20-6	ug/Kg			< 4.6	4.6
1,1,1-Trichloroethane	71-55-6	ug/Kg	680	100,000	< 4.6	4.6
1,1,2,2-Tetrachloroethane	79-34-5	ug/Kg			< 480	480
1,1,2-Trichloroethane	79-00-5	ug/Kg			< 4.6	4.6
1,1-Dichloroethane	75-34-3	ug/Kg	270	19,000	< 4.6	4.6
1,1-Dichloroethene	75-35-4	ug/Kg	330	100,000	< 4.6	4.6
1,1-Dichloropropene	563-58-6	ug/Kg			< 4.6	4.6
1,2,3-Trichlorobenzene	87-61-6	ug/Kg			< 480	480
1,2,3-Trichloropropane	96-18-4	ug/Kg			< 480	480
1,2,4-Trichlorobenzene	120-82-1	ug/Kg			< 480	480
1,2,4-Trimethylbenzene	95-63-6	ug/Kg	3,600	47,000	< 480	480
1,2-Dibromo-3-chloropropane	96-12-8	ug/Kg			< 480	480
1,2-Dibromoethane	106-93-4	ug/Kg			< 4.6	4.6
1,2-Dichlorobenzene	95-50-1	ug/Kg	1,100	100,000	< 480	480
1,2-Dichloroethane	107-06-2	ug/Kg	20	2,300	< 4.6	4.6
1,2-Dichloropropane	78-87-5	ug/Kg			< 4.6	4.6
1,3,5-Trimethylbenzene	108-67-8	ug/Kg	8,400	47,000	< 480	480
1,3-Dichlorobenzene	541-73-1	ug/Kg	2,400	17,000	< 480	480
1,3-Dichloropropane	142-28-9	ug/Kg			< 4.6	4.6
1,4-Dichlorobenzene	106-46-7	ug/Kg	1,800	9,800	< 480	480
2,2-Dichloropropane	594-20-7	ug/Kg			< 4.6	4.6
2-Chlorotoluene	95-49-8	ug/Kg			< 480	480
2-Hexanone	591-78-6	ug/Kg			< 23	23

2-Isopropyltoluene	527-84-4	ug/Kg			< 480	480
4-Chlorotoluene	106-43-4	ug/Kg			< 480	480
4-Methyl-2-pentanone	108-10-1	ug/Kg			< 23	23
Acetone	67-64-1	ug/Kg	50	100,000	< 23	23
Acrylonitrile	107-13-1	ug/Kg			< 18	18
Benzene	71-43-2	ug/Kg	60	2,900	< 4.6	4.6
Bromobenzene	108-86-1	ug/Kg			< 480	480
Bromochloromethane	74-97-5	ug/Kg			< 4.6	4.6
Bromodichloromethane	75-27-4	ug/Kg			< 4.6	4.6
Bromoform	75-25-2	ug/Kg			< 4.6	4.6
Bromomethane	74-83-9	ug/Kg			< 4.6	4.6
Carbon Disulfide	75-15-0	ug/Kg			< 4.6	4.6
Carbon tetrachloride	56-23-5	ug/Kg	760	1,400	< 4.6	4.6
Chlorobenzene	108-90-7	ug/Kg	1,100	100,000	< 4.6	4.6
Chloroethane	75-00-3	ug/Kg			< 4.6	4.6
Chloroform	67-66-3	ug/Kg	370	10,000	< 4.6	4.6
Chloromethane	74-87-3	ug/Kg			< 4.6	4.6
cis-1,2-Dichloroethene	156-59-2	ug/Kg	250	59,000	< 4.6	4.6
cis-1,3-Dichloropropene	10061-01-5	ug/Kg			< 4.6	4.6
Dibromochloromethane	124-48-1	ug/Kg			< 4.6	4.6
Dibromomethane	74-95-3	ug/Kg			< 4.6	4.6
Dichlorodifluoromethane	75-71-8	ug/Kg			< 4.6	4.6
Ethylbenzene	100-41-4	ug/Kg	1,000	30,000	< 4.6	4.6
Hexachlorobutadiene	87-68-3	ug/Kg			< 480	480
Isopropylbenzene	98-82-8	ug/Kg			< 480	480
m&p-Xylene	179601-23-1	ug/Kg			< 4.6	4.6
Methyl Ethyl Ketone	78-93-3	ug/Kg	120	100,000	< 23	23
Methyl t-butyl ether (MTBE)	1634-04-4	ug/Kg	930	62,000	< 9.2	9.2
Methylene chloride	75-09-2	ug/Kg	50	51,000	< 9.2	9.2
Naphthalene	91-20-3	ug/Kg	12,000	100,000	< 480	480
n-Butylbenzene	104-51-8	ug/Kg	12,000	100,000	< 480	480
n-Propylbenzene	103-65-1	ug/Kg	3,900	100,000	< 480	480
o-Xylene	95-47-6	ug/Kg			< 4.6	4.6
p-Isopropyltoluene	99-87-6	ug/Kg			< 480	480

sec-Butylbenzene	135-98-8	ug/Kg	11,000	100,000	< 480	480
Styrene	100-42-5	ug/Kg			< 4.6	4.6
tert-Butylbenzene	98-06-6	ug/Kg	5,900	100,000	< 480	480
Tetrachloroethene	127-18-4	ug/Kg	1,300	5,500	< 4.6	4.6
Tetrahydrofuran (THF)	109-99-9	ug/Kg			< 9.2	9.2
Toluene	108-88-3	ug/Kg	700	100,000	< 4.6	4.6
Total Xylenes	1330-20-7	ug/Kg	1,600		< 4.6	4.6
trans-1,2-Dichloroethene	156-60-5	ug/Kg	190	100,000	< 4.6	4.6
trans-1,3-Dichloropropene	10061-02-6	ug/Kg			< 4.6	4.6
trans-1,4-dichloro-2-butene	110-57-6	ug/Kg			< 970	970
Trichloroethene	79-01-6	ug/Kg	470	10,000	< 4.6	4.6
Trichlorofluoromethane	75-69-4	ug/Kg			< 4.6	4.6
Trichlorotrifluoroethane	76-13-1	ug/Kg			< 4.6	4.6
Vinyl chloride	75-01-4	ug/Kg	20	210	< 4.6	4.6
Acrolein	107-02-8	ug/Kg			< 4.6	4.6
Tert-butyl alcohol	75-65-0	ug/Kg			< 92	92
Semivolatiles By SW8270E						
1,2,4,5-Tetrachlorobenzene	95-94-3	ug/Kg			< 260	260
1,2,4-Trichlorobenzene	120-82-1	ug/Kg			< 260	260
1,2-Dichlorobenzene	95-50-1	ug/Kg	1,100	100,000	< 260	260
1,2-Diphenylhydrazine	122-66-7	ug/Kg			< 370	370
1,3-Dichlorobenzene	541-73-1	ug/Kg	2,400	17,000	< 260	260
1,4-Dichlorobenzene	106-46-7	ug/Kg	1,800	9,800	< 260	260
2,2'-Oxybis(1-Chloropropane)	108-60-1	ug/Kg			< 260	260
2,4,5-Trichlorophenol	95-95-4	ug/Kg			< 260	260
2,4,6-Trichlorophenol	88-06-2	ug/Kg			< 260	260
2,4-Dichlorophenol	120-83-2	ug/Kg			< 260	260
2,4-Dimethylphenol	105-67-9	ug/Kg			< 260	260
2,4-Dinitrophenol	51-28-5	ug/Kg			< 370	370
2,4-Dinitrotoluene	121-14-2	ug/Kg			< 260	260
2,6-Dinitrotoluene	606-20-2	ug/Kg			< 260	260
2-Chloronaphthalene	91-58-7	ug/Kg			< 260	260
2-Chlorophenol	95-57-8	ug/Kg			< 260	260

2-Methylnaphthalene	91-57-6	ug/Kg			< 260	260
2-Methylphenol (o-cresol)	95-48-7	ug/Kg	330	100,000	< 260	260
2-Nitroaniline	88-74-4	ug/Kg			< 370	370
2-Nitrophenol	88-75-5	ug/Kg			< 260	260
3&4-Methylphenol (m&p-cresol)	PHNX - M&P CRESOL	ug/Kg			< 370	370
3,3'-Dichlorobenzidine	91-94-1	ug/Kg			< 260	260
3-Nitroaniline	99-09-2	ug/Kg			< 370	370
4,6-Dinitro-2-methylphenol	534-52-1	ug/Kg			< 370	370
4-Bromophenyl phenyl ether	101-55-3	ug/Kg			< 370	370
4-Chloro-3-methylphenol	59-50-7	ug/Kg			< 260	260
4-Chloroaniline	106-47-8	ug/Kg			< 260	260
4-Chlorophenyl phenyl ether	7005-72-3	ug/Kg			< 260	260
4-Nitroaniline	100-01-6	ug/Kg			< 600	600
4-Nitrophenol	100-02-7	ug/Kg			< 260	260
Acenaphthene	83-32-9	ug/Kg	98,000	100,000	< 260	260
Acenaphthylene	208-96-8	ug/Kg	107,000	100,000	< 260	260
Acetophenone	98-86-2	ug/Kg			< 260	260
Aniline	62-53-3	ug/Kg			< 370	370
Anthracene	120-12-7	ug/Kg	1,000,000	100,000	< 260	260
Benz(a)anthracene	56-55-3	ug/Kg	1,000	1,000	< 260	260
Benzidine	92-87-5	ug/Kg			< 260	260
Benzo(a)pyrene	50-32-8	ug/Kg	22,000	1,000	< 260	260
Benzo(b)fluoranthene	205-99-2	ug/Kg	1,700	1,000	< 260	260
Benzo(ghi)perylene	191-24-2	ug/Kg	1,000,000	100,000	< 260	260
Benzo(k)fluoranthene	207-08-9	ug/Kg	1,700	1,000	< 260	260
Benzoic acid	65-85-0	ug/Kg			< 750	750
Benzyl butyl phthalate	85-68-7	ug/Kg			< 260	260
Bis(2-chloroethoxy)methane	111-91-1	ug/Kg			< 260	260
Bis(2-chloroethyl)ether	111-44-4	ug/Kg			< 370	370
Bis(2-ethylhexyl)phthalate	117-81-7	ug/Kg			< 370	370
Carbazole	86-74-8	ug/Kg			< 370	370
Chrysene	218-01-9	ug/Kg	1,000	1,000	< 260	260
Dibenz(a,h)anthracene	53-70-3	ug/Kg	1,000,000	330	< 260	260
Dibenzofuran	132-64-9	ug/Kg	210,000	14,000	< 260	260

Diethyl phthalate	84-66-2	ug/Kg			< 260	260
Dimethylphthalate	131-11-3	ug/Kg			< 260	260
Di-n-butylphthalate	84-74-2	ug/Kg			< 370	370
Di-n-octylphthalate	117-84-0	ug/Kg			< 260	260
Fluoranthene	206-44-0	ug/Kg	1,000,000	100,000	< 260	260
Fluorene	86-73-7	ug/Kg	386,000	100,000	< 260	260
Hexachlorobenzene	118-74-1	ug/Kg	3,200	330	< 260	260
Hexachlorobutadiene	87-68-3	ug/Kg			< 260	260
Hexachlorocyclopentadiene	77-47-4	ug/Kg			< 260	260
Hexachloroethane	67-72-1	ug/Kg			< 260	260
Indeno(1,2,3-cd)pyrene	193-39-5	ug/Kg	8,200	500	< 260	260
Isophorone	78-59-1	ug/Kg			< 260	260
Naphthalene	91-20-3	ug/Kg	12,000	100,000	< 260	260
Nitrobenzene	98-95-3	ug/Kg			< 260	260
N-Nitrosodimethylamine	62-75-9	ug/Kg			< 370	370
N-Nitrosodi-n-propylamine	621-64-7	ug/Kg			< 260	260
N-Nitrosodiphenylamine	86-30-6	ug/Kg			< 370	370
Pentachloronitrobenzene	82-68-8	ug/Kg			< 370	370
Pentachlorophenol	87-86-5	ug/Kg	800	2,400	< 370	370
Phenanthrene	85-01-8	ug/Kg	1,000,000	100,000	< 260	260
Phenol	108-95-2	ug/Kg	330	100,000	< 260	260
Pyrene	129-00-0	ug/Kg	1,000,000	100,000	< 260	260
Pyridine	110-86-1	ug/Kg			< 370	370
Pesticides - Soil By SW8081B						
4,4' -DDD	72-54-8	ug/Kg	14,000	2,600	< 2.3	2.3
4,4' -DDE	72-55-9	ug/Kg	17,000	1,800	12	2.3
4,4' -DDT	50-29-3	ug/Kg	136,000	1,700	7.3	2.3
a-BHC	319-84-6	ug/Kg	20	97	< 7.5	7.5
a-Chlordane	5103-71-9	ug/Kg	2,900	910	< 3.8	3.8
Aldrin	309-00-2	ug/Kg	190	19	< 3.8	3.8
b-BHC	319-85-7	ug/Kg	90	72	< 7.5	7.5
Chlordane	57-74-9	ug/Kg			< 38	38
d-BHC	319-86-8	ug/Kg	250	100,000	< 7.5	7.5

Dieldrin	60-57-1	ug/Kg	100	39	4.8	3.8
Endosulfan I	959-98-8	ug/Kg	102,000	4,800	< 7.5	7.5
Endosulfan II	33213-65-9	ug/Kg	102,000	4,800	< 7.5	7.5
Endosulfan sulfate	1031-07-8	ug/Kg	1,000,000	4,800	< 7.5	7.5
Endrin	72-20-8	ug/Kg	60	2,200	< 7.5	7.5
Endrin aldehyde	7421-93-4	ug/Kg			< 7.5	7.5
Endrin ketone	53494-70-5	ug/Kg			< 7.5	7.5
g-BHC	58-89-9	ug/Kg	100	280	< 1.5	1.5
g-Chlordane	5103-74-2	ug/Kg			< 3.8	3.8
Heptachlor	76-44-8	ug/Kg	380	420	< 7.5	7.5
Heptachlor epoxide	1024-57-3	ug/Kg			< 7.5	7.5
Methoxychlor	72-43-5	ug/Kg			< 38	38
Toxaphene	8001-35-2	ug/Kg			< 150	150
Chlorinated Herbicides By SW8151A						
2,4,5-T	93-76-5	ug/Kg			< 140	140
2,4,5-TP (Silvex)	93-72-1	ug/Kg	3,800	58,000	< 140	140
2,4-D	94-75-7	ug/Kg			< 280	280
2,4-DB	94-82-6	ug/Kg			< 2800	2,800
Dalapon	75-99-0	ug/Kg			< 140	140
Dicamba	1918-00-9	ug/Kg			< 140	140
Dichloroprop	120-36-5	ug/Kg			< 280	280
Dinoseb	88-85-7	ug/Kg			< 280	280
Additional Semi-Volatile Compounds By SW8270E						
1,1-Biphenyl	92-52-4	ug/Kg			< 260	260
1,2,4,5-Tetrachlorobenzene	95-94-3	ug/Kg			< 260	260
Atrazine	1912-24-9	ug/Kg			< 150	150
Benzaldehyde	100-52-7	ug/Kg			< 260	260
Benzo(a)pyrene	50-32-8	ug/Kg	22,000	1,000	< 260	260
Caprolactam	105-60-2	ug/Kg			< 150	150
1,4-dioxane By SW8260D						
1,4-dioxane	123-91-1	ug/kg	100	9,800	< 69	69

Result Detected	
RL Exceeds Criteria	
Result Exceeds Criteria	

PLANNING BOARD MEETING MINUTES

February 26, 2025 at 7:30 PM
432 Route 306, Wesley Hills, NY 10952
Phone: 845-354-0400 | Fax: 845-354-4097

CALL TO ORDER

Present: Acting Chairman- Albert Tew, Vanessa Caren, Neal Wasserman, Joshua Scheinberg

Absent: Chairman- Lon Lieberman, Tzvee Rotberg- 2nd Alternate, Joseph Zupnik- 1st Alternate

Also Present: Bruce Minsky-Deputy Village Attorney, Devon Palmieri- Village Engineer, Jonathan Lockman & Bill Brady- Village Planners, Camille Guido Downey- Village Clerk, Alicia Schultz-Deputy Village Clerk

CONTINUED PUBLIC HEARING ON THE APPLICATIONS OF BEN GROSSBERGER FOR WESLEY CONSTRUCTION GROUP FOR WETLANDS AND CLEARING AND FILLING PERMITS Affecting property located on the northernly side of Glenbrook Road. Designated on the Town of Ramapo Tax Map as Parcel ID#41.10-2-20. Subject property located at 41 Glenbrook Road.

Chairman Tew read the item into the record. Neither the applicant nor their professionals showed for the application. They must attend the next meeting, or the application will be revoked from the Planning Board agenda and a new application will have to be submitted.

Chairman Tew questioned if anyone from the public would like to speak.

Jeffrey Nulman, 14 Glenbrook Road, questioned if the property was in the Village of Wesley Hills or the Town of Ramapo.

Camille Guido-Downey replied that the property is in the Village of Wesley Hills that is in the Town of Ramapo.

Chairman Tew made a motion to adjourn this item to the March 26, 2025 meeting, seconded by Neal Wasserman. Upon vote, this motion was carried unanimously.

Upon vote, this motion was carried unanimously.

CONTINUED PUBLIC HEARING ON THE APPLICATION OF ROCKLAND TREE EXPERT CO., INC. DBA IRA WICKES/ARBORISTS FOR AN AMENDED SITE PLAN AND SPECIAL PERMIT. Affecting property located on the South side of McNamara Road. Designated on the Town of Ramapo Tax Map as Parcel ID#42.13-1-22. Subject property is located at 11 McNamara Road.

Chairman Tew read the item into the record. Amy Mele, the applicant's Attorney, was present. Ms. Mele stated that all the items that were remaining (traffic pattern & water quality) by the Village Professionals have been fulfilled, have no further comments and they need the negative declaration reaffirmed prior to going to the Zoning Boards of Appeals for variances needed.

Bruce Minsky stated that along with Jonathan Lockman, he has created the negative declaration to be adopted, as well as the resolution for adoption. Mr. Lockman stated that along with the recreated negative declaration, he has attached the original from 2010 for reference as well.

Chairman Tew made a motion to approve the following resolution, seconded by Neal Wasserman:

RESOLUTION 25-2
11 McNAMARA ROAD - WICKES
REVISED SPECIAL PERMIT & SITE PLAN

A regular meeting of the **Planning Board of the Village of Wesley Hills** was convened on February 26, 2025, at 7:30 pm.

The meeting was called to order by the acting Chairman Albert Tew, and with a quorum present, the following Resolution was offered by Chairman Tew seconded by Neal Wasserman to wit:

WHEREAS, Rockland Tree Experts Co., Inc., d/b/a Ira Wickes has applied to the Planning Board of the Village of Wesley Hills for a Special Permit and approval of a Site Plan for an existing arborist service, consisting of landscaping services & wholesale nursery on/at premises located on the south side of McNamara Road, 0' west from the intersection of Union Road and designated on the Town of Ramapo Tax Map as Section 42.13, Block 1, Lot 22, commonly known as 11 McNamara Road, Wesley Hills NY;

WHEREAS, the Applicant appeared in person and/or by its representative(s) and testified for the Application;

WHEREAS, at the public hearing, the Planning Board gave access to a public hearing and members of the public appeared and/or discussed the Application, and with the Planning Board considering all input from the public;

WHEREAS, the Planning Board, in reviewing the Application, and the activities at the Premises [existing arborist service, consisting of landscaping services & wholesale nursery] therein, has consulted with its professionals [Planner, Engineer, Legal];

NOW, upon said hearing and the evidence presented, it is hereby found and determined:

BE IT RESOLVED, the Planning Board of the Village of Wesley Hills has, by separate document, the Re-Affirmation of Negative Declaration – Notice of Determination of Non-Significance, dated February 26, 2025, set forth a complete and detailed analysis with respect to the Planning Board's consideration of the instant Application, with undertaking of a comprehensive review of the Application and its potential impacts on the environment as defined in the State Environmental Quality Review Act ("SEQRA").

BE IT FURTHER RESOLVED, that the Planning Board determines that the Application/Project will not have a significant impact on the environment as defined in SEQRA.

The Approval granted herein is expressly conditioned and subject to the Applicant's compliance with: (i) all local laws and ordinances of the Village of Wesley Hills as well as other governing municipalities/authorities; and (ii) any other requirements/conditions imposed by the Village's Building/Fire Inspector.

Note that the Planning Board gives no approval of any building plans to be submitted, and any plans submitted to this Planning Board are solely for the purposes of the approval(s) as stated herein.

Upon vote, this motion was carried unanimously.

PUBLIC HEARING ON THE APPLICATION OF CONGREGATION AHAVAS YITZCHAK FOR A REVISION OF A SPECIAL PERMIT AND REVISED SITE PLAN APPROVAL FOR A NEIGHBORHOOD GATHERING. Affecting property located on the west side of Forshay Road at the intersection with Parker Blvd. Designated on the Town of Ramapo Tax Map as Parcel ID #41.18-1-12. Subject property is located at 73 Forshay Road**.**

Chairman Tew read this item into the record. Rachel Barese, applicant's Engineer, stated that years ago they needed and were planning on a new parking lot, but Co-Vid hit, and the project was stalled. In the interim, the applicant decided they are going to change the original plan and split the project into TWO (2) separate Phases: Phase I is going to include adding 40 parking spaces, which is more spaces than the previously approved plans, and a handicapped accessible ramp. Phase II is going to include a smaller handicapped ramp, entrance and patio. Ms. Barese states that they have satisfied all items including the adopted negative declaration and approval from the Zoning Board of Appeals for variances for front yard, side yard, and impervious surface ratio, so their last step is getting site plan approval.

Jonathan Lockman stated that there are a couple items remaining from his February 12, 2025 memo, including a time frame of when they are planning to begin each phase of the project, how long they believe each phase should take, and some conceptual architectural plans including the new addition(s) to be shown. Mr. Lockman stated that this is a Type II SEQRA action and no further environmental review is needed. Mr. Lockman read the following review letters into the record:

1. Rockland County Department of Planning, dated February 25, 2025
2. Rockland County Highway Department, dated February 12, 2025
3. Rockland County Sewer District No. 1, dated February 25, 2025

Ms. Barese stated that they will decrease the curb radii as much as possible as stated in the County Highway Department letter and will work with the County regarding dedication and any easements needed.

Vanessa Caren questioned if there is an elevator being installed anywhere. Ms. Barese answered that there is currently no elevator on the plan, but that is why they are installing the larger handicap ramp. Mr. Lockman added that this is why conceptual plans are needed, so the Board and Village Professionals can see what

they are planning to put on the site and some indication that the plans submitted will withstand time.

Devon Palmieri stated that the only remaining item they would like to review is the landscaping as mentioned in the County Planning Department letter, to ensure proper screening from the parking lot and new ramp to be installed from the adjoining street(s).
Jeffrey Nulman, 14 Glenbrook Road, questioned if the handicap parking spaces are to be assigned.

Ms. Barese responded that she does not believe they will be assigned.

Mr. Nulman questioned if there is going to be a parking spot at the bottom of the ramp.

Ms. Barese stated that there are (4) handicap parking spaces in close proximity to the beginning of the new walking ramp to be installed, down to the basement and it is not for vehicles.

Bruce Minsky questioned when the applicant was granted variances from the Zoning Board of Appeals of the Village of Wesley Hills, and if it was for the same site plans that the Planning Board has reviewed.

Ms. Barese answered that yes, they are the same site plans that were granted variances in December 2024, they are working with the Village Professionals to complete the check print and tonight are seeking conditional approval on the conceptual plans to be submitted by the architect.

Mr. Minsky stated that the Code states that

Chairman Tew made a motion to approve the following resolution subject to the applied, seconded by Vanessa Caren:

RESOLUTION 25-3
73 FORSHAY ROAD- CONG. AHAVAS YITZCHAK
AMENDED SITE PLAN & SPECIAL PERMIT

A regular meeting of the **Planning Board of the Village of Wesley Hills** was convened on February 26, 2025, at 7:30 pm.

The meeting was called to order by the acting Chairman Albert Tew, and with a quorum present, the following Resolution was offered by Chairman Tew, seconded by Joshua Scheinberg to wit:

WHEREAS, in regard to the application submitted by **CONGREGATION AHAVAS YITZCHAK** for a Revision of Site Plan and Special Permit, specifically for a Neighborhood Gathering, the same affecting the property(ies) located/designated on the west side of Forshay Road at the intersection with Parker Blvd., designated on the Town of Ramapo Tax Map as Parcel ID # 41.18-1-12. The subject Property(ies) is/are commonly known as 73 Forshay Road, Wesley Hills NY;

WHEREAS, after due notice, a public hearing on said Application was held by the Planning Board February 26 2025;

WHEREAS, the Applicant appeared in person and by its representative(s) and testified for the Application;

WHEREAS, at the public hearing, the Planning Board gave access to a public hearing and no members of the public appeared and/or no one opposed the Application, and with the Planning Board considering all input from the public;

WHEREAS, the Planning Board consulted with its professionals [Planner, Engineer, Legal], and based on the Application filed reviewed and determined that:

(i) the Application was a Type II action under SEQRA, and was issued an associated negative declaration on the previous application on August 22, 24, 2022, which was herein reinstated – given the now project/application is smaller in scope;

(ii) the Application was subject to GML referrals; and

(iii) except as stated/conditioned below, the Application satisfied the criteria, considerations and standards of the Village of Wesley Hills Code where applicable, except for any further variances that will be required based on a review of the Village's Building Inspector of the eventual permit application;

NOW, upon said hearing and the evidence presented, it is hereby found and determined.

BE IT RESOLVED that the Application, as per the *Amended/Revised Site Plan* by Civil Tec Engineering & Survey PC, last revised dated December 19, 2024, is approved;

BE IT FURTHER RESOLVED that the Approval granted herein is expressly conditioned and subject to the Applicant's compliance with: (i) Rockland County's Department of Planning letter dated February 25 , 2025; (ii) Nelson Pope Voorhis' letter dated February 12, 2025, specifically the *'Submission Comments'* Nos. 1 and 2 [See Page 2]; (iii) all local laws and ordinances of the Village of Wesley Hills as well as other governing municipalities/authorities; and (iii) any other requirements/conditions imposed by the Village's Building/Fire Inspector.

Note that the Planning Board gives no approval of any building plans to be submitted, and any plans submitted to this Planning Board are solely for the purposes of the approval(s) as stated herein.

Upon vote, this motion was carried unanimously.

DISCUSSION

Chairman Tew stated that we need to set a time limit for the public to speak. Jonathan Lockman stated that we should have a sign in sheet so we know who is in the audience, and a timer of some sort to be set when each person of the public begins to speak, in 3 or 5 minute intervals.

ADJOURNMENT

Chairman Tew made a motion to adjourn the meeting, seconded by Vanessa Caren. Upon vote, this motion was carried unanimously.

Respectfully Submitted,
Alicia Schultz